National Semiconductor

July 1995

DP8390D/NS32490D NIC Network Interface Controller

General Description

The DP8390D/NS32490D Network Interface Controller (NIC) is a microCMOS VLSI device designed to ease interfacing with CSMA/CD type local area networks including Ethernet, Thin Ethernet (Cheapernet) and StarLAN. The NIC implements all Media Access Control (MAC) layer functions for transmission and reception of packets in accordance with the IEEE 802.3 Standard. Unique dual DMA channels and an internal FIFO provide a simple yet efficient packet management design. To minimize system parts count and cost, all bus arbitration and memory support logic are integrated into the NIC.

The NIC is the heart of a three chip set that implements the complete IEEE 802.3 protocol and node electronics as shown below. The others include the DP8391 Serial Network Interface (SNI) and the DP8392 Coaxial Transceiver Interface (CTI).

Features

- Compatible with IEEE 802.3/Ethernet II/Thin Ethernet/StarLAN
- Interfaces with 8-, 16- and 32-bit microprocessor systems
- Implements simple, versatile buffer management
- Requires single 5V supply
- Utilizes low power microCMOS process
- Includes
  - — Two 16-bit DMA channels
  - — 16-byte internal FIFO with programmable threshold
  - — Network statistics storage
- Supports physical, multicast, and broadcast address filtering
- Provides 3 levels of loopback
- Utilizes independent system and network clocks

Table of Contents

1.0 SYSTEM DIAGRAM

2.0 BLOCK DIAGRAM

3.0 FUNCTIONAL DESCRIPTION

4.0 TRANSMIT/RECEIVE PACKET ENCAPSULATION/DECAPSULATION

5.0 PIN DESCRIPTIONS

6.0 DIRECT MEMORY ACCESS CONTROL (DMA)

7.0 PACKET RECEPTION

8.0 PACKET TRANSMISSION

9.0 REMOTE DMA

10.0 INTERNAL REGISTERS

11.0 INITIALIZATION PROCEDURES

12.0 LOOPBACK DIAGNOSTICS

13.0 BUS ARBITRATION AND TIMING

14.0 PRELIMINARY ELECTRICAL CHARACTERISTICS

15.0 SWITCHING CHARACTERISTICS

16.0 PHYSICAL DIMENSIONS

1.0 System Diagram

IEEE 802.3 Compatible Ethernet/Thin Ethernet Local Area Network Chip Set

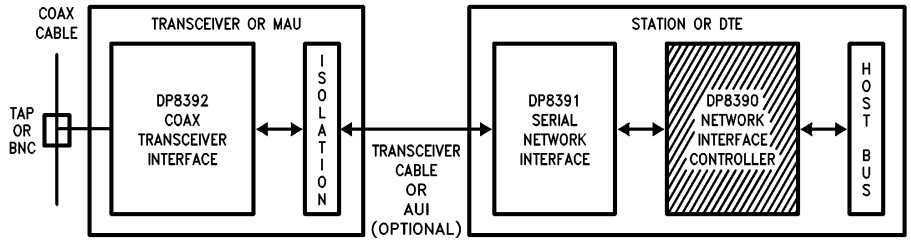

TL/F/8582–1

TRI-STATE® is a registered trademark of National Semiconductor Corporation.

©1995 National Semiconductor Corporation TL/F/8582

RRD-B30M105/Printed in U. S. A.

2.0 Block Diagram

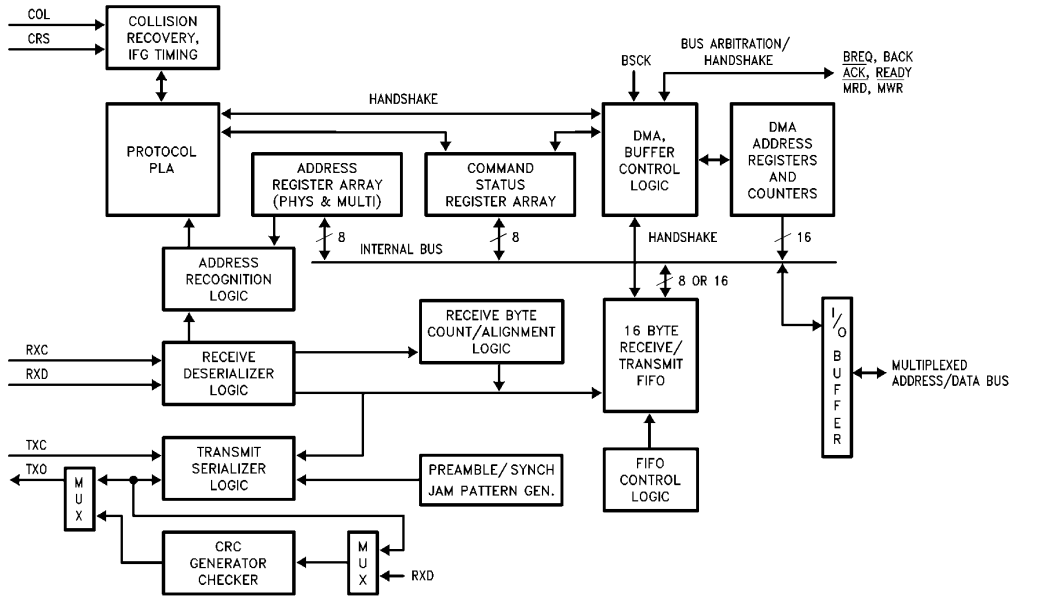

TL/F/8582–2

FIGURE 1

3.0 Functional Description

(Refer to *Figure 1*)

RECEIVE DESERIALIZER

The Receive Deserializer is activated when the input signal Carrier Sense is asserted to allow incoming bits to be shifted into the shift register by the receive clock. The serial receive data is also routed to the CRC generator/checker. The Receive Deserializer includes a synch detector which detects the SFD (Start of Frame Delimiter) to establish where byte boundaries within the serial bit stream are located. After every eight receive clocks, the byte wide data is transferred to the 16-byte FIFO and the Receive Byte Count is incremented. The first six bytes after the SFD are checked for valid comparison by the Address Recognition Logic. If the Address Recognition Logic does not recognize the packet, the FIFO is cleared.

CRC GENERATOR/CHECKER

During transmission, the CRC logic generates a local CRC field for the transmitted bit sequence. The CRC encodes all fields after the synch byte. The CRC is shifted out MSB first following the last transmit byte. During reception the CRC logic generates a CRC field from the incoming packet. This local CRC is serially compared to the incoming CRC appended to the end of the packet by the transmitting node. If the local and received CRC match, a specific pattern will be generated and decoded to indicate no data errors. Transmission errors result in a different pattern and are detected, resulting in rejection of a packet.

TRANSMIT SERIALIZER

The Transmit Serializer reads parallel data from the FIFO and serializes it for transmission. The serializer is clocked by the transmit clock generated by the Serial Network Interface (DP8391). The serial data is also shifted into the CRC generator/checker. At the beginning of each transmission, the Preamble and Synch Generator append 62 bits of 1,0 preamble and a 1,1 synch pattern. After the last data byte of the packet has been serialized the 32-bit FCS field is shifted directly out of the CRC generator. In the event of a collision the Preamble and Synch generator is used to generate a 32-bit JAM pattern of all 1's

ADDRESS RECOGNITION LOGIC

The address recognition logic compares the Destination Address Field (first 6 bytes of the received packet) to the Physical address registers stored in the Address Register Array. If any one of the six bytes does not match the pre-programmed physical address, the Protocol Control Logic rejects the packet. All multicast destination addresses are filtered using a hashing technique. (See register description.) If the multicast address indexes a bit that has been set in the filter bit array of the Multicast Address Register Array the packet is accepted, otherwise it is rejected by the Protocol Control Logic. Each destination address is also checked for all 1's which is the reserved broadcast address.

FIFO AND FIFO CONTROL LOGIC

The NIC features a 16-byte FIFO. During transmission the DMA writes data into the FIFO and the Transmit Serializer reads data from the FIFO and transmits it. During reception the Receive Deserializer writes data into the FIFO and the DMA reads data from the FIFO. The FIFO control logic is used to count the number of bytes in the FIFO so that after a preset level, the DMA can begin a bus access and write/read data to/from the FIFO before a FIFO underflow//overflow occurs.

3.0 Functional Description (Continued)

Because the NIC must buffer the Address field of each incoming packet to determine whether the packet matches its Physical Address Registers or maps to one of its Multicast Registers, the first local DMA transfer does not occur until 8 bytes have accumulated in the FIFO.

To assure that there is no overwriting of data in the FIFO, the FIFO logic flags a FIFO overrun as the 13th byte is written into the FIFO; this effectively shortens the FIFO to 13 bytes. In addition, the FIFO logic operates differently in Byte Mode than in Word Mode. In Byte Mode, a threshold is indicated when the n + 1 byte has entered the FIFO; thus, with an 8-byte threshold, the NIC issues Bus Request (BREQ) when the 9th byte has entered the FIFO. For Word Mode, BREQ is not generated until the n + 2 bytes have entered the FIFO. Thus, with a 4 word threshold (equivalent to an 8-byte threshold), BREQ is issued when the 10th byte has entered the FIFO.

PROTOCOL PLA

The protocol PLA is responsible for implementing the IEEE 802.3 protocol, including collision recovery with random backoff. The Protocol PLA also formats packets during transmission and strips preamble and synch during reception.

DMA AND BUFFER CONTROL LOGIC

The DMA and Buffer Control Logic is used to control two 16-bit DMA channels. During reception, the Local DMA stores packets in a receive buffer ring, located in buffer memory. During transmission the Local DMA uses programmed pointer and length registers to transfer a packet from local buffer memory to the FIFO. A second DMA channel is used as a slave DMA to transfer data between the local buffer memory and the host system. The Local DMA and Remote DMA are internally arbitrated, with the Local DMA channel having highest priority. Both DMA channels use a common external bus clock to generate all required bus timing. External arbitration is performed with a standard bus request, bus acknowledge handshake protocol.

4.0 Transmit/Receive Packet Encapsulation/Decapsulation

A standard IEEE 802.3 packet consists of the following fields: preamble, Start of Frame Delimiter (SFD), destination address, source address, length, data, and Frame Check Sequence (FCS). The typical format is shown in *Figure 2.* The packets are Manchester encoded and decoded by the DP8391 SNI and transferred serially to the NIC using NRZ data with a clock. All fields are of fixed length except for the data field. The NIC generates and appends the preamble, SFD and FCS field during transmission. The Preamble and SFD fields are stripped during reception. (The CRC is passed through to buffer memory during reception.)

PREAMBLE AND START OF FRAME DELIMITER (SFD)

The Manchester encoded alternating 1,0 preamble field is used by the SNI (DP8391) to acquire bit synchronization with an incoming packet. When transmitted each packet contains 62 bits of alternating 1,0 preamble. Some of this preamble will be lost as the packet travels through the network. The preamble field is stripped by the NIC. Byte alignment is performed with the Start of Frame Delimiter (SFD) pattern which consists of two consecutive 1's. The NIC does not treat the SFD pattern as a byte, it detects only the two bit pattern. This allows any preceding preamble within the SFD to be used for phase locking.

DESTINATION ADDRESS

The destination address indicates the destination of the packet on the network and is used to filter unwanted packets from reaching a node. There are three types of address formats supported by the NIC: physical, multicast, and broadcast. The physical address is a unique address that corresponds only to a single node. All physical addresses have an MSB of ''0''. These addresses are compared to the internally stored physical address registers. Each bit in the destination address must match in order for the NIC to accept the packet. Multicast addresses begin with an MSB of ''1''. The DP8390D filters multicast addresses using a standard hashing algorithm that maps all multicast addresses into a 6-bit value. This 6-bit value indexes a 64-bit array that filters the value. If the address consists of all 1's it is a broadcast address, indicating that the packet is intended for all nodes. A promiscuous mode allows reception of all packets: the destination address is not required to match any filters. Physical, broadcast, multicast, and promiscuous address modes can be selected.

SOURCE ADDRESS

The source address is the physical address of the node that sent the packet. Source addresses cannot be multicast or broadcast addresses. This field is simply passed to buffer memory.

LENGTH FIELD

The 2-byte length field indicates the number of bytes that are contained in the data field of the packet. This field is not interpreted by the NIC.

DATA FIELD

The data field consists of anywhere from 46 to 1500 bytes. Messages longer than 1500 bytes need to be broken into multiple packets. Messages shorter than 46 bytes will require appending a pad to bring the data field to the minimum length of 46 bytes. If the data field is padded, the number of valid data bytes is indicated in the length field. **The NIC does not strip or append pad bytes for short packets, or check for oversize packets.**

FCS FIELD

The Frame Check Sequence (FCS) is a 32-bit CRC field calculated and appended to a packet during transmission to allow detection of errors when a packet is received. During reception, error free packets result in a specific pattern in the CRC generator. Packets with improper CRC will be rejected. The AUTODIN II ($X^{32} + X^{26} + X^{23} + X^{22} + X^{16} + X^{12} + X^{11} + X^{10} + X^{8} + X^{7} + X^{5} + X^{4} + X^{2} + X^{1} + 1$) polynomial is used for the CRC calculations.

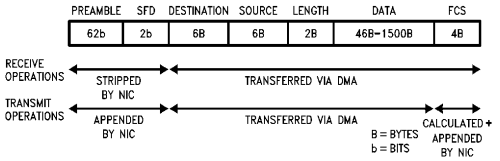

TL/F/8582–3

FIGURE 2

Connection Diagrams

Plastic Chip Carrier

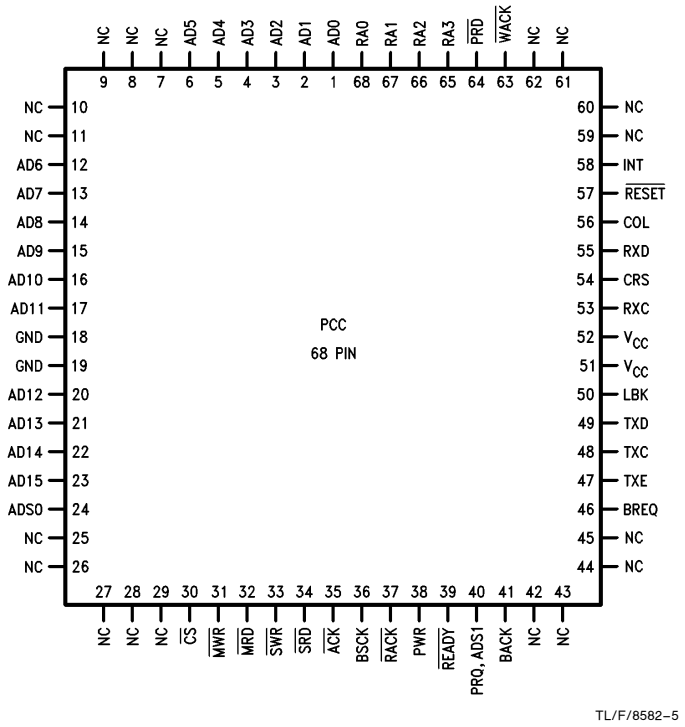

TL/F/8582–5

Dual-In-Line Package

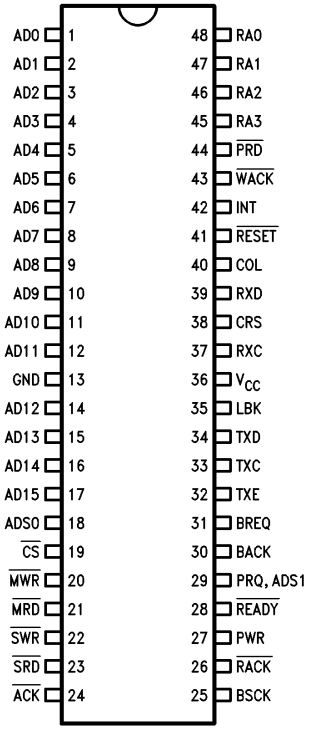

TL/F/8582–4

Order Number DP8390DN or DP8390DV
See NS Package Number N48A or V68A

5.0 Pin Descriptions

BUS INTERFACE PINS

Symbol	DIP Pin No	Function	Description
AD0–AD15	1–12 14–17	I/O,Z	**MULTIPLEXED ADDRESS/DATA BUS:** • Register Access, with DMA inactive, $\overline{CS}$ low and $\overline{ACK}$ returned from NIC, pins AD0–AD7 are used to read/write register data. AD8–AD15 float during I/O transfers. $\overline{SRD}$, $\overline{SWR}$ pins are used to select direction of transfer. • Bus Master with BACK input asserted. During t1 of memory cycle AD0–AD15 contain address. During t2, t3, t4 AD0–AD15 contain data (word transfer mode). During t2, t3, t4 AD0–AD7 contain data, AD8–AD15 contain address (byte transfer mode). Direction of transfer is indicated by NIC on $\overline{MWR}$, $\overline{MRD}$ lines.
ADS0	18	I/O,Z	**ADDRESS STROBE 0** • Input with DMA inactive and $\overline{CS}$ low, latches RA0–RA3 inputs on falling edge. If high, data present on RA0–RA3 will flow through latch. • Output when Bus Master, latches address bits (A0–A15) to external memory during DMA transfers.

5.0 Pin Descriptions (Continued)

BUS INTERFACE PINS (Continued)

Symbol	DIP Pin No	Function	Description
$\overline{CS}$	19	I	**CHIP SELECT:** Chip Select places controller in slave mode for μP access to internal registers. Must be valid through data portion of bus cycle. RA0–RA3 are used to select the internal register. $\overline{SWR}$ and $\overline{SRD}$ select direction of data transfer.
$\overline{MWR}$	20	O,Z	**MASTER WRITE STROBE:** Strobe for DMA transfers, active low during write cycles (t2, t3, tw) to buffer memory. Rising edge coincides with the presence of valid output data. TRI-STATE® until BACK asserted.
$\overline{MRD}$	21	O,Z	**MASTER READ STROBE:** Strobe for DMA transfers, active during read cycles (t2, t3, tw) to buffer memory. Input data must be valid on rising edge of $\overline{MRD}$. TRI-STATE until BACK asserted.
$\overline{SWR}$	22	I	**SLAVE WRITE STROBE:** Strobe from CPU to write an internal register selected by RA0–RA3.
$\overline{SRD}$	23	I	**SLAVE READ STROBE:** Strobe from CPU to read an internal register selected by RA0–RA3.
$\overline{ACK}$	24	O	**ACKNOWLEDGE:** Active low when NIC grants access to CPU. Used to insert WAIT states to CPU until NIC is synchronized for a register read or write operation.
RA0–RA3	45–48	I	**REGISTER ADDRESS:** These four pins are used to select a register to be read or written. The state of these inputs is ignored when the NIC is not in slave mode ($\overline{CS}$ high).
$\overline{PRD}$	44	O	**PORT READ:** Enables data from external latch onto local bus during a memory write cycle to local memory (remote write operation). This allows asynchronous transfer of data from the system memory to local memory.
$\overline{WACK}$	43	I	**WRITE ACKNOWLEDGE:** Issued from system to NIC to indicate that data has been written to the external latch. The NIC will begin a write cycle to place the data in local memory.
INT	42	O	**INTERRUPT:** Indicates that the NIC requires CPU attention after reception transmission or completion of DMA transfers. The interrupt is cleared by writing to the ISR. All interrupts are maskable.
$\overline{RESET}$	41	I	**RESET:** Reset is active low and places the NIC in a reset mode immediately, no packets are transmitted or received by the NIC until STA bit is set. Affects Command Register, Interrupt Mask Register, Data Configuration Register and Transmit Configuration Register. The NIC will execute reset within 10 BUSK cycles.
BREQ	31	O	**BUS REQUEST:** Bus Request is an active high signal used to request the bus for DMA transfers. This signal is automatically generated when the FIFO needs servicing.
BACK	30	I	**BUS ACKNOWLEDGE:** Bus Acknowledge is an active high signal indicating that the CPU has granted the bus to the NIC. If immediate bus access is desired, BREQ should be tied to BACK. **Tying BACK to V_{CC} will result in a deadlock.**
PRQ, ADS1	29	O,Z	**PORT REQUEST/ADDRESS STROBE 1** • 32-BIT MODE: If LAS is set in the Data Configuration Register, this line is programmed as ADS1. It is used to strobe addresses A16–A31 into external latches. (A16–A31 are the fixed addresses stored in RSAR0, RSAR1.) ADS1 will remain at TRI-STATE until BACK is received. • 16-BIT MODE: If LAS is not set in the Data Configuration Register, this line is programmed as PRQ and is used for Remote DMA Transfers. In this mode PRQ will be a standard logic output. **NOTE: This line will power up as TRI-STATE until the Data Configuration Register is programmed.**
$\overline{READY}$	28	I	**READY:** This pin is set high to insert wait states during a DMA transfer. The NIC will sample this signal at t3 during DMA transfers.

5.0 Pin Descriptions (Continued)

BUS INTERFACE PINS (Continued)

Symbol	DIP Pin No	Function	Description
$\overline{PWR}$	27	O	**PORT WRITE:** Strobe used to latch data from the NIC into external latch for transfer to host memory during Remote Read transfers. The rising edge of $\overline{PWR}$ coincides with the presence of valid data on the local bus.
$\overline{RACK}$	26	I	**READ ACKNOWLEDGE:** Indicates that the system DMA or host CPU has read the data placed in the external latch by the NIC. The NIC will begin a read cycle to update the latch.
BSCK	25	I	This clock is used to establish the period of the DMA memory cycle. Four clock cycles (t1, t2, t3, t4) are used per DMA cycle. DMA transfers can be extended by one BSCK increments using the $\overline{READY}$ input.
NETWORK INTERFACE PINS			
COL	40	I	**COLLISION DETECT:** This line becomes active when a collision has been detected on the coaxial cable. During transmission this line is monitored after preamble and synch have been transmitted. At the end of each transmission this line is monitored for CD heartbeat.
RXD	39	I	**RECEIVE DATA:** Serial NRZ data received from the ENDEC, clocked into the NIC on the rising edge of RXC.
CRS	38	I	**CARRIER SENSE:** This signal is provided by the ENDEC and indicates that carrier is present. This signal is active high.
RXC	37	I	**RECEIVE CLOCK:** Re-synchronized clock from the ENDEC used to clock data from the ENDEC into the NIC.
LBK	35	O	**LOOPBACK:** This output is set high when the NIC is programmed to perform a loopback through the StarLAN ENDEC.
TXD	34	O	**TRANSMIT DATA:** Serial NRZ Data output to the ENDEC. The data is valid on the rising edge of TXC.
TXC	33	I	**TRANSMIT CLOCK:** This clock is used to provide timing for internal operation and to shift bits out of the transmit serializer. TXC is nominally a 1 MHz clock provided by the ENDEC.
TXE	32	O	**TRANSMIT ENABLE:** This output becomes active when the first bit of the packet is valid on TXD and goes low after the last bit of the packet is clocked out of TXD. This signal connects directly to the ENDEC. This signal is active high.
POWER			
V_{CC}	36		+5V DC is required. It is suggested that a decoupling capacitor be connected between these pins. It is essential to provide a path to ground for the GND pin with the lowest possible impedance.
GND	13		

6.0 Direct Memory Access Control (DMA)

The DMA capabilities of the NIC greatly simplify use of the DP8390D in typical configurations. The local DMA channel transfers data between the FIFO and memory. On transmission, the packet is DMA'd from memory to the FIFO in bursts. Should a collision occur (up to 15 times), the packet is retransmitted with no processor intervention. On reception, packets are DMAed from the FIFO to the receive buffer ring (as explained below).

A remote DMA channel is also provided on the NIC to accomplish transfers between a buffer memory and system memory. The two DMA channels can alternatively be combined to form a single 32-bit address with 8- or 16-bit data.

DUAL DMA CONFIGURATION

An example configuration using both the local and remote DMA channels is shown below. Network activity is isolated on a local bus, where the NIC's local DMA channel performs burst transfers between the buffer memory and the NIC's FIFO. The Remote DMA transfers data between the buffer memory and the host memory via a bidirectional I/O port. The Remote DMA provides local addressing capability and is used as a slave DMA by the host. Host side addressing must be provided by a host DMA or the CPU. The NIC allows Local and Remote DMA operations to be interleaved.

SINGLE CHANNEL DMA OPERATION

If desirable, the two DMA channels can be combined to provide a 32-bit DMA address. The upper 16 bits of the 32-bit address are static and are used to point to a 64k byte (or 32k word) page of memory where packets are to be received and transmitted.

6.0 Direct Memory Access Control (DMA) (Continued)

Dual Bus System

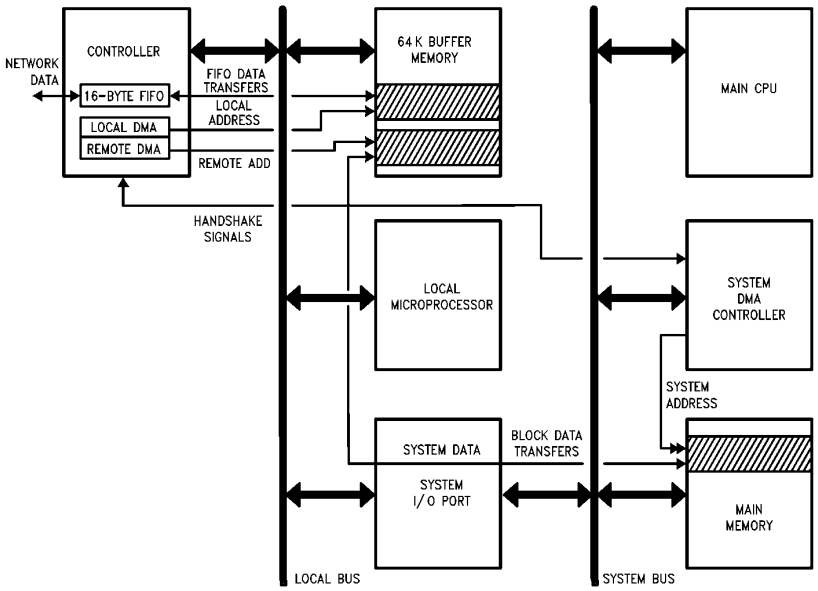

TL/F/8582–55

32-Bit DMA Operation

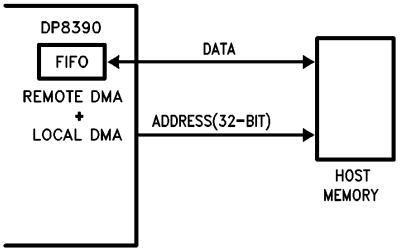

TL/F/8582–6

7.0 Packet Reception

The Local DMA receive channel uses a Buffer Ring Structure comprised of a series of contiguous fixed length 256 byte (128 word) buffers for storage of received packets. The location of the Receive Buffer Ring is programmed in two registers, a Page Start and a Page Stop Register. Ethernet packets consist of a distribution of shorter link control packets and longer data packets, the 256 byte buffer length provides a good compromise between short packets and longer packets to most efficiently use memory. In addition these buffers provide memory resources for storage of back-to-back packets in loaded networks. The assignment of buffers

NIC Receive Buffer Ring

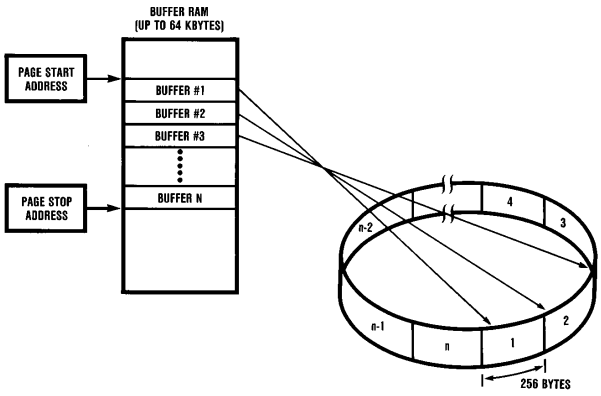

TL/F/8582–7

7.0 Packet Reception (Continued)

for storing packets is controlled by Buffer Management Logic in the NIC. The Buffer Management Logic provides three basic functions: linking receive buffers for long packets, recovery of buffers when a packet is rejected, and recirculation of buffer pages that have been read by the host.

At initialization, a portion of the 64k byte (or 32k word) address space is reserved for the receive buffer ring. Two eight bit registers, the Page Start Address Register (PSTART) and the Page Stop Address Register (PSTOP) define the physical boundaries of where the buffers reside. The NIC treats the list of buffers as a logical ring; whenever the DMA address reaches the Page Stop Address, the DMA is reset to the Page Start Address.

INITIALIZATION OF THE BUFFER RING

Two static registers and two working registers control the operation of the Buffer Ring. These are the Page Start Register, Page Stop Register (both described previously), the Current Page Register and the Boundary Pointer Register. The Current Page Register points to the first buffer used to store a packet and is used to restore the DMA for writing status to the Buffer Ring or for restoring the DMA address in the event of a Runt packet, a CRC, or Frame Alignment error. The Boundary Register points to the first packet in the Ring not yet read by the host. If the local DMA address ever reaches the Boundary, reception is aborted. The Boundary Pointer is also used to initialize the Remote DMA for removing a packet and is advanced when a packet is removed. A simple analogy to remember the function of these registers is that the Current Page Register acts as a Write Pointer and the Boundary Pointer acts as a Read Pointer.

Note 1: At initialization, the Page Start Register value should be loaded into both the Current Page Register and the Boundary Pointer Register.

Note 2: The Page Start Register must not be initialized to 00H.

Receive Buffer Ring At Initialization

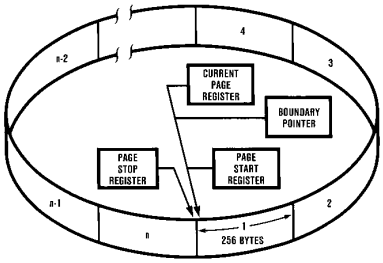

TL/F/8582–30

BEGINNING OF RECEPTION

When the first packet begins arriving the NIC begins storing the packet at the location pointed to by the Current Page Register. An offset of 4 bytes is saved in this first buffer to allow room for storing receive status corresponding to this packet.

Received Packet Enters Buffer Pages

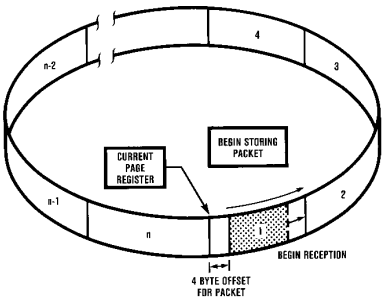

TL/F/8582–31

LINKING RECEIVE BUFFER PAGES

If the length of the packet exhausts the first 256 byte buffer, the DMA performs a forward link to the next buffer to store the remainder of the packet. For a maximal length packet the buffer logic will link six buffers to store the entire packet. Buffers cannot be skipped when linking, a packet will always be stored in contiguous buffers. Before the next buffer can be linked, the Buffer Management Logic performs two comparisons. The first comparison tests for equality between the DMA address of the next buffer and the contents of the Page Stop Register. If the buffer address equals the Page Stop Register, the buffer management logic will restore the DMA to the first buffer in the Receive Buffer Ring value programmed in the Page Start Address Register. The second comparison tests for equality between the DMA address of the next buffer address and the contents of the Boundary Pointer Register. If the two values are equal the reception is aborted. The Boundary Pointer Register can be used to protect against overwriting any area in the receive buffer ring that has not yet been read. When linking buffers, buffer management will never cross this pointer, effectively avoiding any overwrites. If the buffer address does not match either the Boundary Pointer or Page Stop Address, the link to the next buffer is performed.

Linking Buffers

Before the DMA can enter the next contiguous 256 byte buffer, the address is checked for equality to PSTOP and to the Boundary Pointer. If neither are reached, the DMA is allowed to use the next buffer.

Linking Receive Buffer Pages

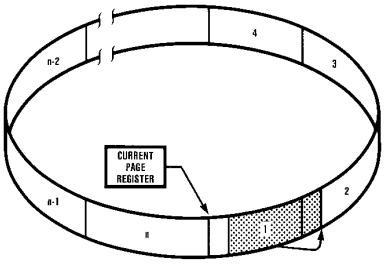

1) Check for = to PSTOP
2) Check for = to Boundary

TL/F/8582–32

7.0 Packet Reception (Continued)

Received Packet Aborted if It Hits Boundary Pointer

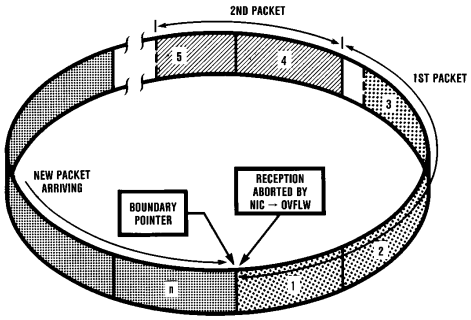

TL/F/8582–8

Buffer Ring Overflow

If the Buffer Ring has been filled and the DMA reaches the Boundary Pointer Address, reception of the incoming packet will be aborted by the NIC. Thus, the packets previously received and still contained in the Ring will not be destroyed.

In a heavily loaded network environment the local DMA may be disabled, preventing the NIC from buffering packets from the network. To guarantee this will not happen, a software reset must be issued during all Receive Buffer Ring overflows (indicated by the OVW bit in the Interrupt Status Register). **The following procedure is required to recover from a Receiver Buffer Ring Overflow.**

If this routine is not adhered to, the NIC may act in an unpredictable manner. It should also be noted that it is not permissible to service an overflow interrupt by continuing to empty packets from the receive buffer without implementing the prescribed overflow routine. A flow chart of the NIC's overflow routine can be found at the right.

Note: It is necessary to define a variable in the driver, which will be called ''Resend''.

1. Read and store the value of the TXP bit in the NIC's Command Register.
2. Issue the STOP command to the NIC. This is accomplished be setting the STP bit in the NIC's Command Register. Writing 21H to the Command Register will stop the NIC.

Note: If the STP is set when a transmission is in progress, the RST bit may not be set. In this case, the NIC is guaranteed to be reset after the longest packet time (1500 bytes = 1.2 ms). For the DP8390D (but not for the DP8390B), the NIC will be reset within 2 microseconds after the STP bit is set and Loopback mode 1 is programmed.

3. Wait for at least 1.6 ms. Since the NIC will complete any transmission or reception that is in progress, it is necessary to time out for the maximum possible duration of an Ethernet transmission or reception. By waiting 1.6 ms this is achieved with some guard band added. Previously, it was recommended that the RST bit of the Interrupt Status Register be polled to insure that the pending transmission or reception is completed. This bit is not a reliable indicator and subsequently should be ignored.
4. Clear the NIC's Remote Byte Count registers (RBCR0 and RBCR1).

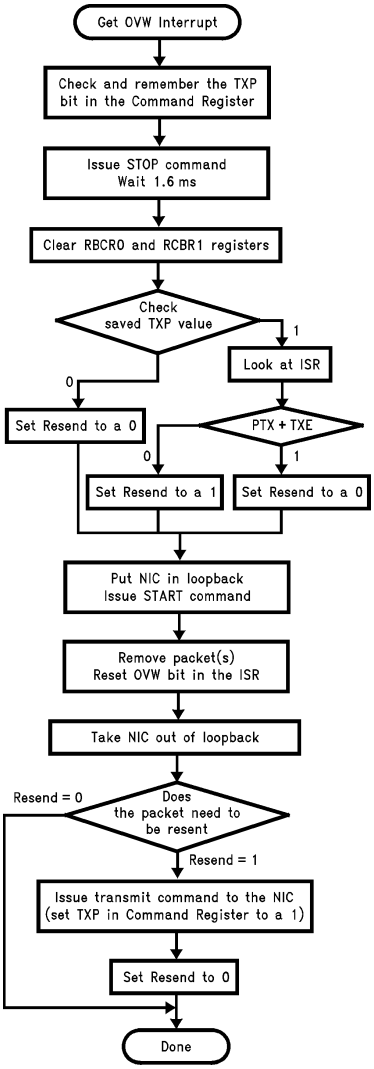

TL/F/8582–95

Overflow Routine Flow Chart

5. Read the stored value of the TXP bit from step 1, above.

   If this value is a 0, set the ''Resend'' variable to a 0 and jump to step 6.

   If this value is a 1, read the NIC's Interrupt Status Register. If either the Packet Transmitted bit (PTX) or Transmit Error bit (TXE) is set to a 1, set the ''Resend'' variable to a 0 and jump to step 6. If neither of these bits is set, place a 1 in the ''Resend'' variable and jump to step 6.

   This step determines if there was a transmission in progress when the stop command was issued in step 2. If there was a transmission in progress, the NIC's ISR is read to determine whether or not the packet was recognized by the NIC. If neither the PTX nor TXE bit was set,

7.0 Packet Reception (Continued)

then the packet will essentially be lost and re-transmitted only after a time-out takes place in the upper level software. By determining that the packet was lost at the driver level, a transmit command can be reissued to the NIC once the overflow routine is completed (as in step 11). Also, it is possible for the NIC to defer indefinitely, when it is stopped on a busy network. Step 5 also alleviates this problem. Step 5 is essential and should not be omitted from the overflow routine, in order for the NIC to operate correctly.

6. Place the NIC in either mode 1 or mode 2 loopback. This can be accomplished by setting bits D2 and D1, of the Transmit Configuration Register, to ''0,1'' or ''1,0'', respectively.
7. Issue the START command to the NIC. This can be accomplished by writing 22H to the Command Register. This is necessary to activate the NIC's Remote DMA channel.
8. Remove one or more packets from the receive buffer ring.
9. Reset the overwrite warning (OVW, overflow) bit in the Interrupt Status Register.
10. Take the NIC out of loopback. This is done by writing the Transmit Configuration Register with the value it contains during normal operation. (Bits D2 and D1 should both be programmed to 0.)
11. If the ''Resend'' variable is set to a 1, reset the ''Resend'' variable and reissue the transmit command. This is done by writing a value of 26H to the Command Register. If the ''Resend'' variable is 0, nothing needs to be done.

Note: If Remote DMA is not being used, the NIC does not need to be started before packets can be removed from the receive buffer ring. Hence, step 8 could be done before step 7.

END OF PACKET OPERATIONS

At the end of the packet the NIC determines whether the received packet is to be accepted or rejected. It either branches to a routine to store the Buffer Header or to another routine that recovers the buffers used to store the packet.

SUCCESSFUL RECEPTION

If the packet is successfully received as shown, the DMA is restored to the first buffer used to store the packet (pointed to by the Current Page Register). The DMA then stores the Receive Status, a Pointer to where the next packet will be stored (Buffer 4) and the number of received bytes. Note that the remaining bytes in the last buffer are discarded and reception of the next packet begins on the next empty 256-byte buffer boundary. The Current Page Register is then initialized to the next available buffer in the Buffer Ring. (The location of the next buffer had been previously calculated and temporarily stored in an internal scratchpad register.)

Termination of Received Packet—Packet Accepted

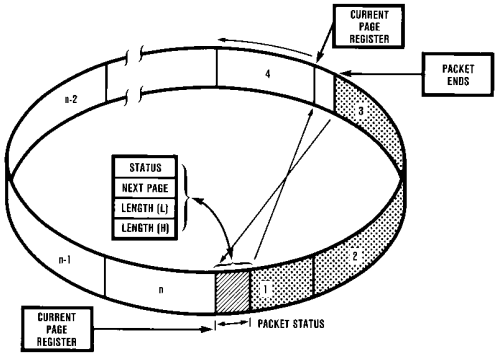

TL/F/8582–10

BUFFER RECOVERY FOR REJECTED PACKETS

If the packet is a runt packet or contains CRC or Frame Alignment errors, it is rejected. The buffer management logic resets the DMA back to the first buffer page used to store the packet (pointed to by CURR), recovering all buffers that had been used to store the rejected packet. This operation will not be performed if the NIC is programmed to accept either runt packets or packets with CRC or Frame Alignment errors. The received CRC is always stored in buffer memory after the last byte of received data for the packet.

Termination of Received Packet—Packet Rejected

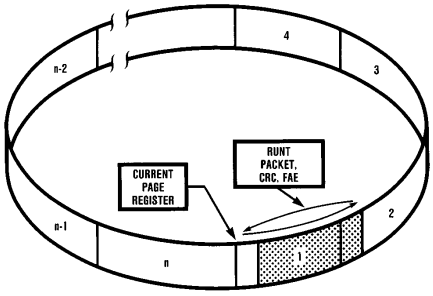

TL/F/8582–13

Error Recovery

If the packet is rejected as shown, the DMA is restored by the NIC by reprogramming the DMA starting address pointed to by the Current Page Register.

REMOVING PACKETS FROM THE RING

Packets are removed from the ring using the Remote DMA or an external device. When using the Remote DMA the Send Packet command can be used. This programs the Remote DMA to automatically remove the received packet pointed to by the Boundary Pointer. At the end of the transfer, the NIC moves the Boundary Pointer, freeing additional buffers for reception. The Boundary Pointer can also be moved manually by programming the Boundary Register. Care should be taken to keep the Boundary Pointer at least one buffer behind the Current Page Pointer.

The following is a suggested method for maintaining the Receive Buffer Ring pointers.

1. At initialization, set up a software variable (next_pkt) to indicate where the next packet will be read. At the beginning of each Remote Read DMA operation, the value of next_pkt will be loaded into RSAR0 and RSAR1.
2. When initializing the NIC set:
   BNDRY = PSTART
   CURR = PSTART + 1
   next_pkt = PSTART + 1

7.0 Packet Reception (Continued)

3. After a packet is DMAed from the Receive Buffer Ring, the Next Page Pointer (second byte in NIC buffer header) is used to update BNDRY and next_pkt.

   next_pkt = Next Page Pointer
   BNDRY = Next Page Pointer − 1
   If BNDRY < PSTART then BNDRY = PSTOP − 1

Note the size of the Receive Buffer Ring is reduced by one 256-byte buffer; this will not, however, impede the operation of the NIC.

In StarLAN applications using bus clock frequencies greater than 4 MHz, the NIC does not update the buffer header information properly because of the disparity between the network and bus clock speeds. The lower byte count is copied twice into the third and fourth locations of the buffer header and the upper byte count is not written. The upper byte count, however, can be calculated from the current next page pointer (second byte in the buffer header) and the previous next page pointer (stored in memory by the CPU). The following routine calculates the upper byte count and allows StarLAN applications to be insensitive to bus clock speeds. Next_pkt is defined similarly as above.

1st Received Packet Removed By Remote DMA

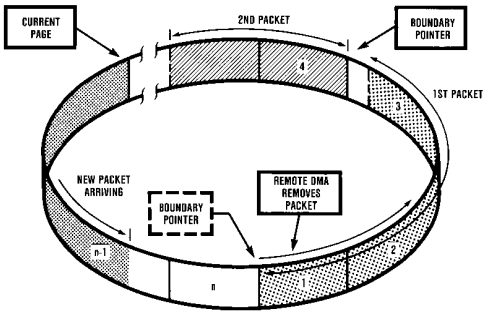

TL/F/8582–57

upper byte count = next page pointer − next_pkt − 1
if (upper byte count) < 0 then
upper byte count = (PSTOP − next_pkt) + (next page pointer − PSTART) − 1
if (lower byte count) > 0 fch then
upper byte count = upper byte count + 1

STORAGE FORMAT FOR RECEIVED PACKETS

The following diagrams describe the format for how received packets are placed into memory by the local DMA channel. These modes are selected in the Data Configuration Register.

Storage Format

AD15 – AD8	AD7 – AD0
Next Packet Pointer	Receive Status
Receive Byte Count 1	Receive Byte Count 0
Byte 2	Byte 1

BOS = 0, WTS = 1 in Data Configuration Register.

This format used with Series 32000 808X type processors.

AD15 – AD8	AD7 – AD0
Next Packet Pointer	Receive Status
Receive Byte Count 0	Receive Byte Count 1
Byte 1	Byte 2

BOS = 1, WTS = 1 in Data Configuration Register.

This format used with 68000 type processors.

Note: The Receive Byte Count ordering remains the same for BOS=0 or 1.

AD7 – AD0
Receive Status
Next Packet Pointer
Receive Byte Count 0
Receive Byte Count 1
Byte 0
Byte 1

BOS = 0, WTS = 0 in Data Configuration Register.

This format used with general 8-bit CPUs.

8.0 Packet Transmission

The Local DMA is also used during transmission of a packet. Three registers control the DMA transfer during transmission, a Transmit Page Start Address Register (TPSR) and the Transmit Byte Count Registers (TBCR0,1). When the NIC receives a command to transmit the packet pointed to by these registers, buffer memory data will be moved into the FIFO as required during transmission. The NIC will generate and append the preamble, synch and CRC fields.

TRANSMIT PACKET ASSEMBLY

The NIC requires a contiguous assembled packet with the format shown. The transmit byte count includes the Destination Address, Source Address, Length Field and Data. It does not include preamble and CRC. When transmitting data smaller than 46 bytes, the packet must be padded to a minimum size of 64 bytes. The programmer is responsible for adding and stripping pad bytes.

General Transmit Packet Format

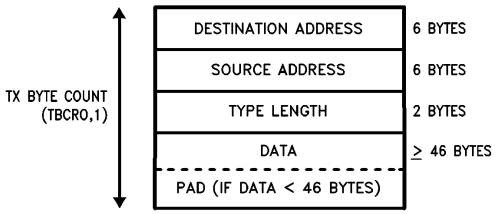

TL/F/8582–58

8.0 Packet Transmission (Continued)

TRANSMISSION

Prior to transmission, the TPSR (Transmit Page Start Register) and TBCR0, TBCR1 (Transmit Byte Count Registers) must be initialized. To initiate transmission of the packet the TXP bit in the Command Register is set. The Transmit Status Register (TSR) is cleared and the NIC begins to prefetch transmit data from memory (unless the NIC is currently receiving). If the interframe gap has timed out the NIC will begin transmission.

CONDITIONS REQUIRED TO BEGIN TRANSMISSION

In order to transmit a packet, the following three conditions must be met:

1. The Interframe Gap Timer has timed out the first 6.4 μs of the Interframe Gap (See appendix for Interframe Gap Flowchart)
2. At least one byte has entered the FIFO. (This indicates that the burst transfer has been started)
3. If the NIC had collided, the backoff timer has expired.

In typical systems the NIC has already prefetched the first burst of bytes before the 6.4 μs timer expires. The time during which NIC transmits preamble can also be used to load the FIFO.

Note: If carrier sense is asserted before a byte has been loaded into the FIFO, the NIC will become a receiver.

COLLISION RECOVERY

During transmission, the Buffer Management logic monitors the transmit circuitry to determine if a collision has occurred. If a collision is detected, the Buffer Management logic will reset the FIFO and restore the Transmit DMA pointers for retransmission of the packet. The COL bit will be set in the TSR and the NCR (Number of Collisions Register) will be incremented. If 15 retransmissions each result in a collision the transmission will be aborted and the ABT bit in the TSR will be set.

Note: NCR reads as zeroes if excessive collisions are encountered.

TRANSMIT PACKET ASSEMBLY FORMAT

The following diagrams describe the format for how packets must be assembled prior to transmission for different byte ordering schemes. The various formats are selected in the Data Configuration Register.

D15 D8	D7 D0
DA1	DA0
DA3	DA2
DA5	DA4
SA1	DA0
SA3	DA2
SA5	DA4
T/L1	T/L0
DATA 1	DATA 0

BOS = 0, WTS = 1 in Data Configuration Register.

This format is used with Series 32000, 808X type processors.

D15 D8	D7 D0
DA0	DA1
DA2	DA3
DA4	DA5
SA0	SA1
SA2	SA3
SA4	SA5
T/L0	T/L1
DATA 0	DATA 1

BOS = 1, WTS = 1 in Data Configuration Register.

This format is used with 68000 type processors.

D7 D0
DA0
DA1
DA2
DA3
DA4
DA5
SA0
SA1
SA2
SA3

BOS = 0, WTS = 0 in Data Configuration Register.

This format is used with general 8-bit CPUs.

Note: All examples above will result in a transmission of a packet in order of DA0, DA1, DA2, DA3 . . . bits within each byte will be transmitted least significant bit first.

DA = Destination Address

SA = Source Address

T/L = Type/Length Field

9.0 Remote DMA

The Remote DMA channel is used to both assemble packets for transmission, and to remove received packets from the Receive Buffer Ring. It may also be used as a general purpose slave DMA channel for moving blocks of data or commands between host memory and local buffer memory. There are three modes of operation, Remote Write, Remote Read, or Send Packet.

Two register pairs are used to control the Remote DMA, a Remote Start Address (RSAR0, RSAR1) and a Remote Byte Count (RBCR0, RBCR1) register pair. The Start Address Register pair points to the beginning of the block to be moved while the Byte Count Register pair is used to indicate the number of bytes to be transferred. Full handshake logic is provided to move data between local buffer memory and a bidirectional I/O port.

9.0 Remote DMA (Continued)

REMOTE WRITE

A Remote Write transfer is used to move a block of data from the host into local buffer memory. The Remote DMA will read data from the I/O port and sequentially write it to local buffer memory beginning at the Remote Start Address. The DMA Address will be incremented and the Byte Counter will be decremented after each transfer. The DMA is terminated when the Remote Byte Count Register reaches a count of zero.

REMOTE READ

A Remote Read transfer is used to move a block of data from local buffer memory to the host. The Remote DMA will sequentially read data from the local buffer memory, beginning at the Remote Start Address, and write data to the I/O port. The DMA Address will be incremented and the Byte Counter will be decremented after each transfer. The DMA is terminated when the Remote Byte Count Register reaches zero.

REMOTE DMA WRITE

Setting PRQ Using the Remote Read

Under certain conditions the NIC's bus state machine may issue /MWR and /PRD before PRQ for the first DMA transfer of a Remote Write Command. If this occurs this could cause data corruption, or cause the remote DMA count to be different from the main CPU count causing the system to ''lock up''.

To prevent this condition when implementing a Remote DMA Write, the Remote DMA Write command should first be preceded by a Remote DMA Read command to insure that the PRQ signal is asserted before the NIC starts its port read cycle. The reason for this is that the state machine that asserts PRQ runs independently of the state machine that controls the DMA signals. The DMA machine assumes that PRQ is asserted, but actually may not be. To remedy this situation, a single Remote Read cycle should be inserted before the actual DMA Write Command is given. This will ensure that PRQ is asserted when the Remote DMA Write is subsequently executed. This single Remote Read cycle is called a ''dummy Remote Read.'' In order for the dummy Remote Read cycle to operate correctly, the Start Address should be programmed to a known, safe location in the buffer memory space, and the Remote Byte Count should be progammed to a value greater than 1. This will ensure that the master read cycle is performed safely, eliminating the possiblity of data corruption.

Remote Write with High Speed Buses

When implementing the Remote DMA Write solution in previous section with high speed buses and CPU's, timing problems may cause the system to hang. Therefore additional considerations are required.

The problem occurs when the system can execute the dummy Remote Read and then start the Remote Write before the NIC has had a chance to execute the Remote Read. If this happens the PRQ signal will not get set, and the Remote Byte Count and Remote Start Address for the Remote Write operation could be corrupted. This is shown by the hatched waveforms in the timing diagram below. The execution of the Remote Read can be delayed by the local DMA operations (particularly during end-of-packet processing).

To ensure the dummy Remote Read does execute, a delay must be inserted between writing the Remote Read Command, and starting to write the Remote Write Start Address. (This time is designated in figure below by the delay arrows.) The recommended method to avoid this problem is, after the Remote Read command is given, to poll both bytes of the Current Remote DMA Address Registers. When the address has incremented, PRQ has been set. Software should recognize this and then start the Remote Write.

An additional caution for high speed systems is that the polling must follow guidelines specified at the end of Section 13. That is, there must be at least 4 bus clocks between chip selects. (For example, when BSCK = 20 MHz, then this time should be 200 ns.)

The general flow for executing a Remote Write is:

1. Set Remote Byte Count to a value >1 and Remote Start Address to unused RAM (one location before the transmit start address is usually a safe location).

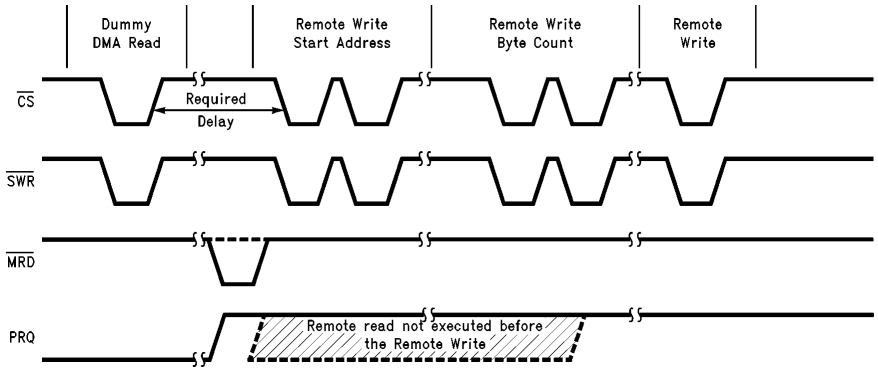

TL/F/8582–96

Timing Diagram for Dummy Remote Read

Note: The dashed lines indicate incorrect timing.

9.0 Remote DMA (Continued)

2. Issue the ''dummy'' Remote Read command.
3. Read the Current Remote DMA Address (CRDA) (both bytes).
4. Compare to previous CRDA value if different go to 6.
5. Delay and jump to 3.
6. Set up for the Remote Write command, by setting the Remote Byte Count and the Remote Start Address (note that if the Remote Byte count in step 1 can be set to the tramsmit byte count plus one, and the Remote Start Address to one less, these will now be incremented to the correct values.)
7. Issue the Remote Write command.

FIFO AND BUS OPERATIONS

Overview

To accommodate the different rates at which data comes from (or goes to) the network and goes to (or comes from) the system memory, the NIC contains a 16-byte FIFO for buffering data between the bus and the media. The FIFO threshold is programmable, allowing filling (or emptying) the FIFO at different rates. When the FIFO has filled to its programmed threshold, the local DMA channel transfers these bytes (or words) into local memory. It is crucial that the local DMA is given access to the bus within a minimum bus latency time; otherwise a FIFO underrun (or overrun) occurs.

To understand FIFO underruns or overruns, there are two causes which produce this condition—

1) the bus latency is so long that the FIFO has filled (or emptied) from the network before the local DMA has serviced the FIFO.
2) the bus latency or bus data rate has slowed the throughput of the local DMA to point where it is slower than the network data rate (10 Mb/s). This second condition is also dependent upon DMA clock and word width (byte wide or word wide).

The worst case condition ultimately limits the overall bus latency which the NIC can tolerate.

FIFO Underrun and Transmit Enable

During transmission, if a FIFO underrun occurs, the Transmit enable (TXE) output may remain high (active). Generally, this will cause a very large packet to be transmitted onto the network. The jabber feature of the transceiver will terminate the transmission, and reset TXE.

To prevent this problem, a properly designed system will not allow FIFO underruns by giving the NIC a bus acknowledge within time shown in the maximum bus latency curves shown and described later.

FIFO at the Beginning of Receive

At the beginning of reception, the NIC stores entire Address field of each incoming packet in the FIFO to determine whether the packet matches its Physical Address Registers or maps to one of its Multicast Registers. This causes the FIFO to accumulate 8 bytes. Furthermore, there are some synchronization delays in the DMA PLA. Thus, the actual time that BREQ is asserted from the time the Start of Frame Delimiter (SFD) is detected is 7.8 μs. This operation affects the bus latencies at 2 and 4 byte thresholds during the first receive BREQ since the FIFO must be filled to 8 bytes (4 words) before issuing a BREQ.

FIFO Operation at the End of Receive

When Carrier Sense goes low, the NIC enters its end of packet processing sequence, emptying its FIFO and writing the status information at the beginning of the packet, figure below. This NIC holds onto the bus for the entire sequence. The longest time BREQ may be extended occurs when a packet ends just as the NIC performs its last FIFO burst. The NIC, in this case, performs a programmed burst transfer followed by flushing the remaining bytes in the FIFO, and completes by writing the header information to memory. The following steps occur during this sequence.

1) NIC issues BREQ because the FIFO threshold has been reached.
2) During the burst, packet ends, resulting in BREQ extended.
3) NIC flushes remaining bytes from FIFO.
4) NIC performs internal processing to prepare for writing the header.
5) NIC writes 4-byte (2-word) header.
6) NIC deasserts BREQ.

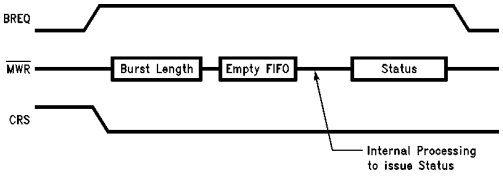

TL/F/8582–97

End of Packet Processing

End of Packet Processing (EOPP) times for 10 MHz and 20 MHz have been tabulated in the table below.

End of Packet Processing Times for Various FIFO Thresholds, Bus Clocks and Transfer Modes

Mode	Threshold	Bus Clock	EOPP
Byte	2 bytes	10 MHz	7.0 μs
	4 bytes		8.6 μs
	8 bytes		11.0 μs
Byte	2 bytes	20 MHz	3.6 μs
	4 bytes		4.2 μs
	8 bytes		5.0 μs
Word	2 bytes	10 MHz	5.4 μs
	4 bytes		6.2 μs
	8 bytes		7.4 μs
Word	2 bytes	20 MHz	3.0 μs
	4 bytes		3.2 μs
	8 bytes		3.6 μs

Threshold Detection (Bus Latency)

To assure that no overwriting of data in the FIFO, the FIFO logic flags a FIFO overrun as the 13th byte is written into the FIFO, effectively shortening the FIFO to 13 bytes. The FIFO logic also operates differently in Byte Mode and in Word Mode. In Byte Mode, a threshold is indicated when the n + 1

9.0 Remote DMA (Continued)

Maximum Bus Latency for Byte Mode

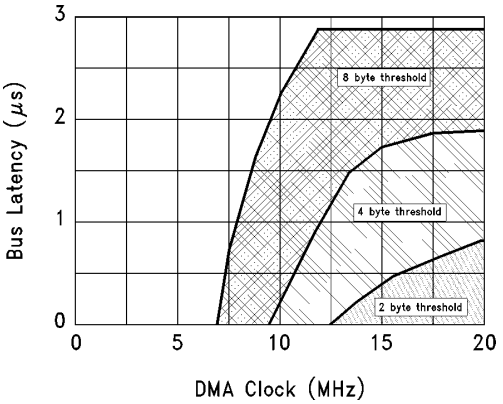

TL/F/8582–98

Maximum Bus Latency for Word Mode

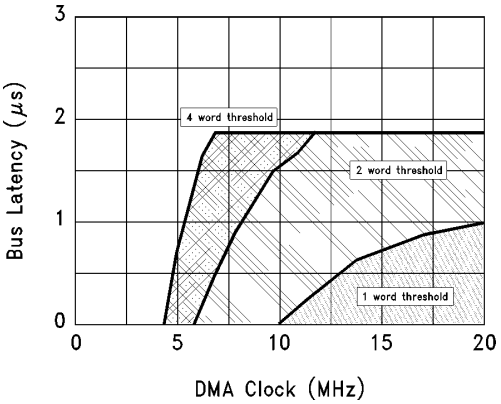

TL/F/8582–99

byte has entered the FIFO; thus, with an 8 byte threshold, the NIC issues Bus Request (BREQ) when the 9th byte has entered the FIFO. For Word Mode, BREQ is not generated until the n+2 bytes have entered the FIFO. Thus, with a 4 word threshold (equivalent to 8 byte threshold), BREQ is issued when the 10th byte has entered the FIFO. The two graphs, the figures above, indicate the maximum allowable bus latency for Word and Byte transfer modes.

The FIFO at the Beginning of Transmit

Before transmitting, the NIC performs a prefetch from memory to load the FIFO. The number of bytes prefetched is the programmed FIFO threshold. The next BREQ is not issued until after the NIC actually begins trasmitting data, i.e., after SFD. The Transmit Prefetch diagram illustrates this process.

SEND PACKET COMMAND

The Remote DMA channel can be automatically initialized to transfer a single packet from the Receive Buffer Ring. The CPU begins this transfer by issuing a ''Send Packet'' Command. The DMA will be initialized to the value of the Boundary Pointer Register and the Remote Byte Count Register pair (RBCR0, RBCR1) will be initialized to the value of the Receive Byte Count fields found in the Buffer Header of each packet. After the data is transferred, the Boundary Pointer is advanced to allow the buffers to be used for new receive packets. The Remote Read will terminate when the Byte Count equals zero. The Remote DMA is then prepared to read the next packet from the Receive Buffer Ring. If the DMA pointer crosses the Page Stop Register, it is reset to the Page Start Address. This allows the Remote DMA to remove packets that have wrapped around to the top of the Receive Buffer Ring.

Note 1: In order for the NIC to correctly execute the Send Packet Command, the upper Remote Byte Count Register (RBCR1) must first be loaded with 0FH.

Note 2: The Send Packet command cannot be used with 68000 type processors.

Transmit Prefetch Timing

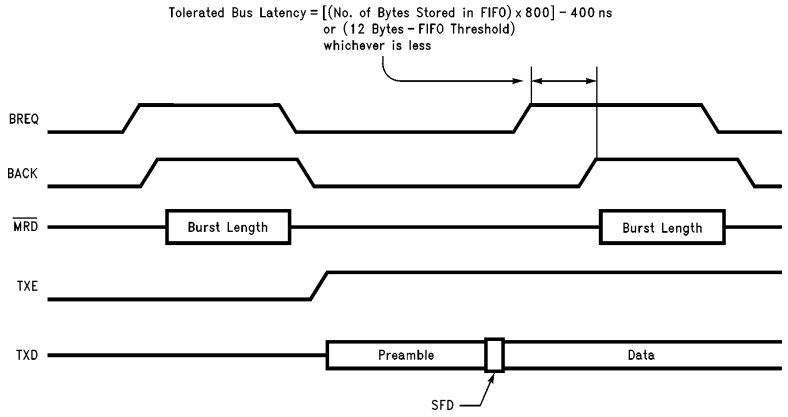

TL/F/8582–A0

9.0 Remote DMA (Continued)

Remote DMA Autoinitialization from Buffer Ring

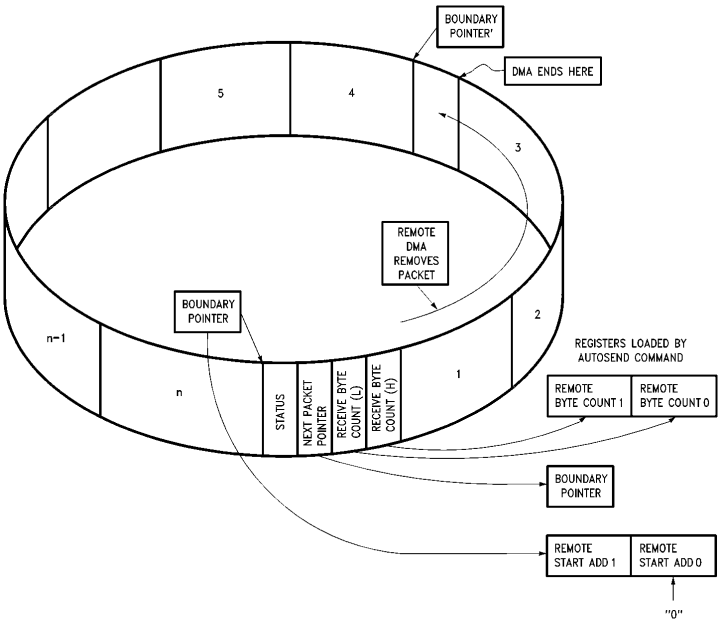

TL/F/8582–59

10.0 Internal Registers

All registers are 8-bit wide and mapped into two pages which are selected in the Command Register (PS0, PS1). Pins RA0–RA3 are used to address registers within each page. Page 0 registers are those registers which are commonly accessed during NIC operation while page 1 registers are used primarily for initialization. The registers are partitioned to avoid having to perform two write/read cycles to access commonly used registers.

10.1 REGISTER ADDRESS MAPPING

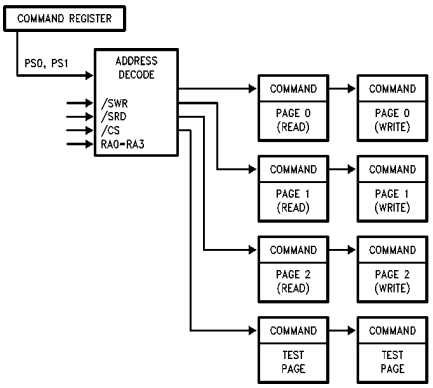

TL/F/8582–60

10.0 Internal Registers (Continued)

10.2 REGISTER ADDRESS ASSIGNMENTS

Page 0 Address Assignments (PS1 = 0, PS0 = 0)

RA0–RA3	RD	WR
00H	Command (CR)	Command (CR)
01H	Current Local DMA Address 0 (CLDA0)	Page Start Register (PSTART)
02H	Current Local DMA Address 1 (CLDA1)	Page Stop Register (PSTOP)
03H	Boundary Pointer (BNRY)	Boundary Pointer (BNRY)
04H	Transmit Status Register (TSR)	Transmit Page Start Address (TPSR)
05H	Number of Collisions Register (NCR)	Transmit Byte Count Register 0 (TBCR0)
06H	FIFO (FIFO)	Transmit Byte Count Register 1 (TBCR1)
07H	Interrupt Status Register (ISR)	Interrupt Status Register (ISR)
08H	Current Remote DMA Address 0 (CRDA0)	Remote Start Address Register 0 (RSAR0)
09H	Current Remote DMA Address 1 (CRDA1)	Remote Start Address Register 1 (RSAR1)
0AH	Reserved	Remote Byte Count Register 0 (RBCR0)
0BH	Reserved	Remote Byte Count Register 1 (RBCR1)
0CH	Receive Status Register (RSR)	Receive Configuration Register (RCR)
0DH	Tally Counter 0 (Frame Alignment Errors) (CNTR0)	Transmit Configuration Register (TCR)
0EH	Tally Counter 1 (CRC Errors) (CNTR1)	Data Configuration Register (DCR)
0FH	Tally Counter 2 (Missed Packet Errors) (CNTR2)	Interrupt Mask Register (IMR)

Page 1 Address Assignments (PS1 = 0, PS0 = 1)

RA0–RA3	RD	WR
00H	Command (CR)	Command (CR)
01H	Physical Address Register 0 (PAR0)	Physical Address Register 0 (PAR0)
02H	Physical Address Register 1 (PAR1)	Physical Address Register 1 (PAR1)
03H	Physical Address Register 2 (PAR2)	Physical Address Register 2 (PAR2)
04H	Physical Address Register 3 (PAR3)	Physical Address Register 3 (PAR3)
05H	Physical Address Register 4 (PAR4)	Physical Address Register 4 (PAR4)
06H	Physical Address Register 5 (PAR5)	Physical Address Register 5 (PAR5)
07H	Current Page Register (CURR)	Current Page Register (CURR)
08H	Multicast Address Register 0 (MAR0)	Multicast Address Register 0 (MAR0)
09H	Multicast Address Register 1 (MAR1)	Multicast Address Register 1 (MAR1)
0AH	Multicast Address Register 2 (MAR2)	Multicast Address Register 2 (MAR2)
0BH	Multicast Address Register 3 (MAR3)	Multicast Address Register 3 (MAR3)
0CH	Multicast Address Register 4 (MAR4)	Multicast Address Register 4 (MAR4)
0DH	Multicast Address Register 5 (MAR5)	Multicast Address Register 5 (MAR5)
0EH	Multicast Address Register 6 (MAR6)	Multicast Address Register 6 (MAR6)
0FH	Multicast Address Register 7 (MAR7)	Multicast Address Register 7 (MAR7)

10.0 Internal Registers (Continued)

Page 2 Address Assignments (PS1 = 1, PS0 = 0)

RA0–RA3	RD	WR
00H	Command (CR)	Command (CR)
01H	Page Start Register (PSTART)	Current Local DMA Address 0 (CLDA0)
02H	Page Stop Register (PSTOP)	Current Local DMA Address 1 (CLDA1)
03H	Remote Next Packet Pointer	Remote Next Packet Pointer
04H	Transmit Page Start Address (TPSR)	Reserved
05H	Local Next Packet Pointer	Local Next Packet Pointer
06H	Address Counter (Upper)	Address Counter (Upper)
07H	Address Counter (Lower)	Address Counter (Lower)

RA0–RA3	RD	WR
08H	Reserved	Reserved
09H	Reserved	Reserved
0AH	Reserved	Reserved
0BH	Reserved	Reserved
0CH	Receive Configuration Register (RCR)	Reserved
0DH	Transmit Configuration Register (TCR)	Reserved
0EH	Data Configuration Register (DCR)	Reserved
0FH	Interrupt Mask Register (IMR)	Reserved

Note: Page 2 registers should only be accessed for diagnostic purposes. They should not be modified during normal operation.

Page 3 should never be modified.

10.0 Internal Registers (Continued)

10.3 Register Descriptions

COMMAND REGISTER (CR) 00H (READ/WRITE)

The Command Register is used to initiate transmissions, enable or disable Remote DMA operations and to select register pages. To issue a command the microprocessor sets the corresponding bit(s) (RD2, RD1, RD0, TXP). Further commands may be overlapped, but with the following rules: (1) If a transmit command overlaps with a remote DMA operation, bits RD0, RD1, and RD2 must be maintained for the remote DMA command when setting the TXP bit. Note, if a remote DMA command is re-issued when giving the transmit command, the DMA will complete immediately if the remote byte count register have not been re-initialized. (2) If a remote DMA operation overlaps a transmission, RD0, RD1, and RD2 may be written with the desired values and a ''0'' written to the TXP bit. Writing a ''0'' to this bit has no effect. (3) A remote write DMA may not overlap remote read operation or visa versa. Either of these operations must either complete or be aborted before the other operation may start.

Bits PS1, PS0, RD2, and STP may be set any time.

7	6	5	4	3	2	1	0
PS1	PS0	RD2	RD1	RD0	TXP	STA	STP

Bit	Symbol	Description
D0	STP	**STOP:** Software reset command, takes the controller offline, no packets will be received or transmitted. Any reception or transmission in progress will continue to completion before entering the reset state. To exit this state, the STP bit must be reset and the STA bit must be set high. To perform a software reset, this bit should be set high. The software reset has executed only when indicated by the RST bit in the ISR being set to a 1. **STP powers up high.** **Note:** If the NIC has previously been in start mode and the STP is set, both the STP and STA bits will remain set.
D1	STA	**START:** This bit is used to activate the NIC after either power up, or when the NIC has been placed in a reset mode by software command or error. **STA powers up low.**
D2	TXP	**TRANSMIT PACKET:** This bit must be set to initiate transmission of a packet. TXP is internally reset either after the transmission is completed or aborted. This bit should be set only after the Transmit Byte Count and Transmit Page Start registers have been programmed. **Note:** Before the transmit command is given, the STA bit must be set and the STP bit reset.
D3, D4, D5	RD0, RD1, RD2	**REMOTE DMA COMMAND:** These three encoded bits control operation of the Remote DMA channel. RD2 can be set to abort any Remote DMA command in progress. The Remote Byte Count Registers should be cleared when a Remote DMA has been aborted. The Remote Start Addresses are not restored to the starting address if the Remote DMA is aborted. RD2 RD1 RD0 0 0 0 Not Allowed 0 0 1 Remote Read 0 1 0 Remote Write (Note 2) 0 1 1 Send Packet 1 X X Abort/Complete Remote DMA (Note 1) **Note 1:** If a remote DMA operation is aborted and the remote byte count has not decremented to zero, PRQ (pin 29, DIP) will remain high. A read acknowledge ($\overline{RACK}$) on a write acknowledge ($\overline{WACK}$) will reset PRQ low. **Note 2:** For proper operation of the Remote Write DMA, there are two steps which must be performed before using the Remote Write DMA. The steps are as follows: i) Write a non-zero value into RBCR0. ii) Set bits RD2, RD1, RD0 to 0, 0, 1. iii) Set RBCR0, 1 and RSAR0, 1 iv) Issue the Remote Write DMA Command (RD2, RD1, RD0 = 0, 1, 0)
D6, D7	PS0, PS1	**PAGE SELECT:** These two encoded bits select which register page is to be accessed with addresses RA0–3. PS1 PS0 0 0 Register Page 0 0 1 Register Page 1 1 0 Register Page 2 1 1 Reserved

10.0 Internal Registers (Continued)

10.3 Register Descriptions (Continued)

INTERRUPT STATUS REGISTER (ISR) 07H (READ/WRITE)

This register is accessed by the host processor to determine the cause of an interrupt. Any interrupt can be masked in the Interrupt Mask Register (IMR). Individual interrupt bits are cleared by writing a ''1'' into the corresponding bit of the ISR. The INT signal is active as long as any unmasked signal is set, and will not go low until all unmasked bits in this register have been cleared. The ISR must be cleared after power up by writing it with all 1's.

7	6	5	4	3	2	1	0
RST	RDC	CNT	OVW	TXE	RXE	PTX	PRX

Bit	Symbol	Description
D0	PRX	**PACKET RECEIVED:** Indicates packet received with no errors.
D1	PTX	**PACKET TRANSMITTED:** Indicates packet transmitted with no errors.
D2	RXE	**RECEIVE ERROR:** Indicates that a packet was received with one or more of the following errors: —CRC Error —Frame Alignment Error —FIFO Overrun —Missed Packet
D3	TXE	**TRANSMIT ERROR:** Set when packet transmitted with one or more of the following errors: —Excessive Collisions —FIFO Underrun
D4	OVW	**OVERWRITE WARNING:** Set when receive buffer ring storage resources have been exhausted. (Local DMA has reached Boundary Pointer).
D5	CNT	**COUNTER OVERFLOW:** Set when MSB of one or more of the Network Tally Counters has been set.
D6	RDC	**REMOTE DMA COMPLETE:** Set when Remote DMA operation has been completed.
D7	RST	**RESET STATUS:** Set when NIC enters reset state and cleared when a Start Command is issued to the CR. This bit is also set when a Receive Buffer Ring overflow occurs and is cleared when one or more packets have been removed from the ring. Writing to this bit has no effect. **NOTE:** This bit does not generate an interrupt, it is merely a status indicator.

10.0 Internal Registers (Continued)

10.3 Register Descriptions (Continued)

INTERRUPT MASK REGISTER (IMR) 0FH (WRITE)

The Interrupt Mask Register is used to mask interrupts. Each interrupt mask bit corresponds to a bit in the Interrupt Status Register (ISR). If an interrupt mask bit is set an interrupt will be issued whenever the corresponding bit in the ISR is set. If any bit in the IMR is set low, an interrupt will not occur when the bit in the ISR is set. **The IMR powers up all zeroes.**

7	6	5	4	3	2	1	0
—	RDCE	CNTE	OVWE	TXEE	RXEE	PTXE	PRXE

Bit	Symbol	Description
D0	PRXE	**PACKET RECEIVED INTERRUPT ENABLE** 0: Interrupt Disabled 1: Enables Interrupt when packet received.
D1	PTXE	**PACKET TRANSMITTED INTERRUPT ENABLE** 0: Interrupt Disabled 1: Enables Interrupt when packet is transmitted.
D2	RXEE	**RECEIVE ERROR INTERRUPT ENABLE** 0: Interrupt Disabled 1: Enables Interrupt when packet received with error.
D3	TXEE	**TRANSMIT ERROR INTERRUPT ENABLE** 0: Interrupt Disabled 1: Enables Interrupt when packet transmission results in error.
D4	OVWE	**OVERWRITE WARNING INTERRUPT ENABLE** 0: Interrupt Disabled 1: Enables Interrupt when Buffer Management Logic lacks sufficient buffers to store incoming packet.
D5	CNTE	**COUNTER OVERFLOW INTERRUPT ENABLE** 0: Interrupt Disabled 1: Enables Interrupt when MSB of one or more of the Network Statistics counters has been set.
D6	RDCE	**DMA COMPLETE INTERRUPT ENABLE** 0: Interrupt Disabled 1: Enables Interrupt when Remote DMA transfer has been completed.
D7	reserved	reserved

10.0 Internal Registers (Continued)

10.3 Register Descriptions (Continued)

DATA CONFIGURATION REGISTER (DCR) 0EH (WRITE)

This Register is used to program the NIC for 8- or 16-bit memory interface, select byte ordering in 16-bit applications and establish FIFO threshholds. **The DCR must be initialized prior to loading the Remote Byte Count Registers. LAS is set on power up.**

7	6	5	4	3	2	1	0
—	FT1	FT0	ARM	LS	LAS	BOS	WTS

Bit	Symbol	Description
D0	WTS	**WORD TRANSFER SELECT** 0: Selects byte-wide DMA transfers 1: Selects word-wide DMA transfers ; WTS establishes byte or word transfers for both Remote and Local DMA transfers **Note:** When word-wide mode is selected, up to 32k words are addressable; A0 remains low.
D1	BOS	**BYTE ORDER SELECT** 0: MS byte placed on AD15–AD8 and LS byte on AD7–AD0. (32000, 8086) 1: MS byte placed on AD7–AD0 and LS byte on AD15–AD8. (68000) ; Ignored when WTS is low
D2	LAS	**LONG ADDRESS SELECT** 0: Dual 16-bit DMA mode 1: Single 32-bit DMA mode ; When LAS is high, the contents of the Remote DMA registers RSAR0,1 are issued as A16–A31 Power up high.
D3	LS	**LOOPBACK SELECT** 0: Loopback mode selected. Bits D1, D2 of the TCR must also be programmed for Loopback operation. 1: Normal Operation.
D4	AR	**AUTO-INITIALIZE REMOTE** 0: Send Command not executed, all packets removed from Buffer Ring under program control. 1: Send Command executed, Remote DMA auto-initialized to remove packets from Buffer Ring. **Note:** Send Command cannot be used with 68000 type processors.
D5, D6	FT0, FT1	**FIFO THRESHHOLD SELECT:** Encoded FIFO threshhold. Establishes point at which bus is requested when filling or emptying the FIFO. During reception, the FIFO threshold indicates the number of bytes (or words) the FIFO has filled serially from the network before bus request (BREQ) is asserted. **Note:** FIFO threshold setting determines the DMA burst length. RECEIVE THRESHOLDS FT1 FT0 Word Wide Byte Wide 0 0 1 Word 2 Bytes 0 1 2 Words 4 Bytes 1 0 4 Words 8 Bytes 1 1 6 Words 12 Bytes During transmission, the FIFO threshold indicates the numer of bytes (or words) the FIFO has filled from the Local DMA before BREQ is asserted. Thus, the transmission threshold is 16 bytes less the receive threshold.

10.0 Internal Registers (Continued)

10.3 Register Descriptions (Continued)

TRANSMIT CONFIGURATION REGISTER (TCR) 0DH (WRITE)

The transmit configuration establishes the actions of the transmitter section of the NIC during transmission of a packet on the network. **LB1 and LB0 which select loopback mode power up as 0.**

7	6	5	4	3	2	1	0
—	—	—	OFST	ATD	LB1	LB0	CRC

Bit	Symbol	Description
D0	CRC	**INHIBIT CRC** 0: CRC appended by transmitter 1: CRC inhibited by transmitter ; In loopback mode CRC can be enabled or disabled to test the CRC logic.
D1, D2	LB0, LB1	**ENCODED LOOPBACK CONTROL:** These encoded configuration bits set the type of loopback that is to be performed. Note that loopback in mode 2 sets the LPBK pin high, this places the SNI in loopback mode and that D3 of the DCR must be set to zero for loopback operation. LB1 LB0 Mode 0 0 0 Normal Operation (LPBK = 0) Mode 1 0 1 Internal Loopback (LPBK = 0) Mode 2 1 0 External Loopback (LPBK = 1) Mode 3 1 1 External Loopback (LPBK = 0)
D3	ATD	**AUTO TRANSMIT DISABLE:** This bit allows another station to disable the NIC's transmitter by transmission of a particular multicast packet. The transmitter can be re-enabled by resetting this bit or by reception of a second particular multicast packet. 0: Normal Operation 1: Reception of multicast address hashing to bit 62 disables transmitter, reception of multicast address hashing to bit 63 enables transmitter.
D4	OFST	**COLLISION OFFSET ENABLE:** This bit modifies the backoff algorithm to allow prioritization of nodes. 0: Backoff Logic implements normal algorithm. 1: Forces Backoff algorithm modification to 0 to $2^{\min(3+n,10)}$ slot times for first three collisions, then follows standard backoff. (For first three collisions station has higher average backoff delay making a low priority mode.)
D5	reserved	reserved
D6	reserved	reserved
D7	reserved	reserved

10.0 Internal Registers (Continued)

10.3 Register Descriptions (Continued)

TRANSMIT STATUS REGISTER (TSR) 04H (READ)

This register records events that occur on the media during transmission of a packet. It is cleared when the next transmission is initiated by the host. All bits remain low unless the event that corresponds to a particular bit occurs during transmission. Each transmission should be followed by a read of this register. The contents of this register are not specified until after the first transmission.

7	6	5	4	3	2	1	0
OWC	CDH	FU	CRS	ABT	COL	—	PTX

Bit	Symbol	Description
D0	PTX	**PACKET TRANSMITTED:** Indicates transmission without error. (No excessive collisions or FIFO underrun) (ABT = ''0'', FU = ''0'').
D1	reserved	reserved
D2	COL	**TRANSMIT COLLIDED:** Indicates that the transmission collided at least once with another station on the network. The number of collisions is recorded in the Number of Collisions Registers (NCR).
D3	ABT	**TRANSMIT ABORTED:** Indicates the NIC aborted transmission because of excessive collisions. (Total number of transmissions including original transmission attempt equals 16).
D4	CRS	**CARRIER SENSE LOST:** This bit is set when carrier is lost during transmission of the packet. Carrier Sense is monitored from the end of Preamble/Synch until TXEN is dropped. Transmission is not aborted on loss of carrier.
D5	FU	**FIFO UNDERRUN:** If the NIC cannot gain access of the bus before the FIFO empties, this bit is set. Transmission of the packet will be aborted.
D6	CDH	**CD HEARTBEAT:** Failure of the transceiver to transmit a collision signal after transmission of a packet will set this bit. The Collision Detect (CD) heartbeat signal must commence during the first 6.4 μs of the Interframe Gap following a transmission. In certain collisions, the CD Heartbeat bit will be set even though the transceiver is not performing the CD heartbeat test.
D7	OWC	**OUT OF WINDOW COLLISION:** Indicates that a collision occurred after a slot time (51.2 μs). Transmissions rescheduled as in normal collisions.

10.0 Internal Registers (Continued)

10.3 Register Descriptions (Continued)

RECEIVE CONFIGURATION REGISTER (RCR) 0CH (WRITE)

This register determines operation of the NIC during reception of a packet and is used to program what types of packets to accept.

7	6	5	4	3	2	1	0
—	—	MON	PRO	AM	AB	AR	SEP

Bit	Symbol	Description
D0	SEP	**SAVE ERRORED PACKETS** 0: Packets with receive errors are rejected. 1: Packets with receive errors are accepted. Receive errors are CRC and Frame Alignment errors.
D1	AR	**ACCEPT RUNT PACKETS:** This bit allows the receiver to accept packets that are smaller than 64 bytes. The packet must be at least 8 bytes long to be accepted as a runt. 0: Packets with fewer than 64 bytes rejected. 1: Packets with fewer than 64 bytes accepted.
D2	AB	**ACCEPT BROADCAST:** Enables the receiver to accept a packet with an all 1's destination address. 0: Packets with broadcast destination address rejected. 1: Packets with broadcast destination address accepted.
D3	AM	**ACCEPT MULTICAST:** Enables the receiver to accept a packet with a multicast address, all multicast addresses must pass the hashing array. 0: Packets with multicast destination address not checked. 1: Packets with multicast destination address checked.
D4	PRO	**PROMISCUOUS PHYSICAL:** Enables the receiver to accept all packets with a physical address. 0: Physical address of node must match the station address programmed in PAR0–PAR5. 1: All packets with physical addresses accepted.
D5	MON	**MONITOR MODE:** Enables the receiver to check addresses and CRC on incoming packets without buffering to memory. The Missed Packet Tally counter will be incremented for each recognized packet. 0: Packets buffered to memory. 1: Packets checked for address match, good CRC and Frame Alignment but not buffered to memory.
D6	reserved	reserved
D7	reserved	reserved

Note: D2 and D3 are ''OR'd'' together, i.e., if D2 and D3 are set the NIC will accept broadcast and multicast addresses as well as its own physical address. To establish full promiscuous mode, bits D2, D3, and D4 should be set. In addition the multicast hashing array must be set to all 1's in order to accept all multicast addresses.

10.0 Internal Registers (Continued)

10.3 Register Descriptions (Continued)

RECEIVE STATUS REGISTER (RSR) 0CH (READ)

This register records status of the received packet, including information on errors and the type of address match, either physical or multicast. The contents of this register are written to buffer memory by the DMA after reception of a good packet. If packets with errors are to be saved the receive status is written to memory at the head of the erroneous packet if an erroneous packet is received. If packets with errors are to be rejected the RSR will not be written to memory. The contents will be cleared when the next packet arrives. CRC errors, Frame Alignment errors and missed packets are counted internally by the NIC which relinquishes the Host from reading the RSR in real time to record errors for Network Management Functions. The contents of this register are not specified until after the first reception.

7	6	5	4	3	2	1	0
DFR	DIS	PHY	MPA	FO	FAE	CRC	PRX

Bit	Symbol	Description
D0	PRX	**PACKET RECEIVED INTACT:** Indicates packet received without error. (Bits CRC, FAE, FO, and MPA are zero for the received packet.)
D1	CRC	**CRC ERROR:** Indicates packet received with CRC error. Increments Tally Counter (CNTR1). This bit will also be set for Frame Alignment errors.
D2	FAE	**FRAME ALIGNMENT ERROR:** Indicates that the incoming packet did not end on a byte boundary and the CRC did not match at last byte boundary. Increments Tally Counter (CNTR0).
D3	FO	**FIFO OVERRUN:** This bit is set when the FIFO is not serviced causing overflow during reception. Reception of the packet will be aborted.
D4	MPA	**MISSED PACKET:** Set when packet intended for node cannot be accepted by NIC because of a lack of receive buffers or if the controller is in monitor mode and did not buffer the packet to memory. Increments Tally Counter (CNTR2).
D5	PHY	**PHYSICAL/MULTICAST ADDRESS:** Indicates whether received packet had a physical or multicast address type. 0: Physical Address Match 1: Multicast/Broadcast Address Match
D6	DIS	**RECEIVER DISABLED:** Set when receiver disabled by entering Monitor mode. Reset when receiver is re-enabled when exiting Monitor mode.
D7	DFR	**DEFERRING:** Set when CRS or COL inputs are active. If the transceiver has asserted the CD line as a result of the jabber, this bit will stay set indicating the jabber condition.

Note: Following coding applies to CRC and FAE bits

FAE	CRC	Type of Error
0	0	No Error (Good CRC and <6 Dribble Bits)
0	1	CRC Error
1	0	Illegal, will not occur
1	1	Frame Alignment Error and CRC Error

10.0 Internal Registers (Continued)

10.4 DMA REGISTERS

DMA Registers

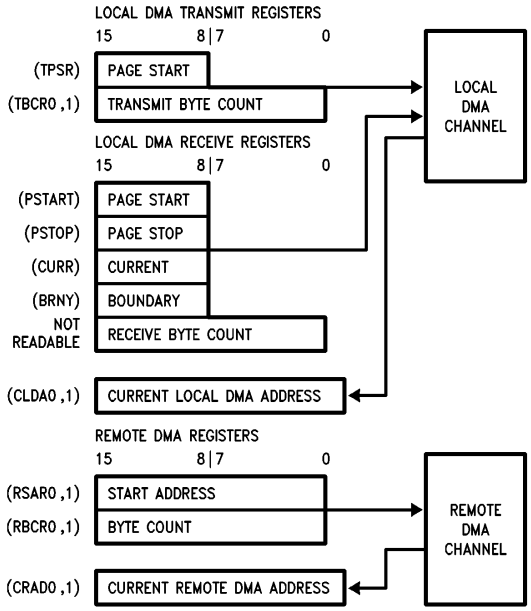

TL/F/8582–61

The DMA Registers are partitioned into three groups; Transmit, Receive and Remote DMA Registers. The Transmit registers are used to initialize the Local DMA Channel for transmission of packets while the Receive Registers are used to initialize the Local DMA Channel for packet Reception. The Page Stop, Page Start, Current and Boundary Registers are used by the Buffer Management Logic to supervise the Receive Buffer Ring. The Remote DMA Registers are used to initialize the Remote DMA.

Note: In the figure above, registers are shown as 8 or 16 bits wide. Although some registers are 16-bit internal registers, all registers are accessed as 8-bit registers. Thus the 16-bit Transmit Byte Count Register is broken into two 8-bit registers, TBCR0 and TBCR1. Also TPSR, PSTART, PSTOP, CURR and BNRY only check or control the upper 8 bits of address information on the bus. Thus they are shifted to positions 15-8 in the diagram above.

10.5 TRANSMIT DMA REGISTERS

TRANSMIT PAGE START REGISTER (TPSR)

This register points to the assembled packet to be transmitted. Only the eight higher order addresses are specified since all transmit packets are assembled on 256-byte page boundaries. The bit assignment is shown below. The values placed in bits D7–D0 will be used to initialize the higher order address (A8–A15) of the Local DMA for transmission. The lower order bits (A7–A0) are initialized to zero.

Bit Assignment

	7	6	5	4	3	2	1	0
TPSR	A15	A14	A13	A12	A11	A10	A9	A8

(A7–A0 Initialized to zero)

TRANSMIT BYTE COUNT REGISTER 0,1 (TBCR0, TBCR1)

These two registers indicate the length of the packet to be transmitted in bytes. The count must include the number of bytes in the source, destination, length and data fields. The maximum number of transmit bytes allowed is 64k bytes. The NIC will not truncate transmissions longer than 1500 bytes. The bit assignment is shown below:

	7	6	5	4	3	2	1	0
TBCR1	L15	L14	L13	L12	L11	L10	L9	L8

	7	6	5	4	3	2	1	0
TBCR0	L7	L6	L5	L4	L3	L2	L1	L0

10.6 LOCAL DMA RECEIVE REGISTERS

PAGE START STOP REGISTERS (PSTART, PSTOP)

The Page Start and Page Stop Registers program the starting and stopping address of the Receive Buffer Ring. Since the NIC uses fixed 256-byte buffers aligned on page boundaries only the upper eight bits of the start and stop address are specified.

PSTART,PSTOP bit assignment

	7	6	5	4	3	2	1	0
PSTART, PSTOP	A15	A14	A13	A12	A11	A10	A9	A8

BOUNDARY (BNRY) REGISTER

This register is used to prevent overflow of the Receive Buffer Ring. Buffer management compares the contents of this register to the next buffer address when linking buffers together. If the contents of this register match the next buffer address the Local DMA operation is aborted.

	7	6	5	4	3	2	1	0
BNRY	A15	A14	A13	A12	A11	A10	A9	A8

10.0 Internal Registers (Continued)

CURRENT PAGE REGISTER (CURR)

This register is used internally by the Buffer Management Logic as a backup register for reception. CURR contains the address of the first buffer to be used for a packet reception and is used to restore DMA pointers in the event of receive errors. This register is initialized to the same value as PSTART and should not be written to again unless the controller is Reset.

	7	6	5	4	3	2	1	0
CURR	A15	A14	A13	A12	A11	A10	A9	A8

CURRENT LOCAL DMA REGISTER 0,1 (CLDA0,1)

These two registers can be accessed to determine the current Local DMA Address.

	7	6	5	4	3	2	1	0
CLDA1	A15	A14	A13	A12	A11	A10	A9	A8

	7	6	5	4	3	2	1	0
CLDA0	A7	A6	A5	A4	A3	A2	A1	A0

10.7 REMOTE DMA REGISTERS

REMOTE START ADDRESS REGISTERS (RSAR0,1)

Remote DMA operations are programmed via the Remote Start Address (RSAR0,1) and Remote Byte Count (RBCR0,1) registers. The Remote Start Address is used to point to the start of the block of data to be transferred and the Remote Byte Count is used to indicate the length of the block (in bytes).

	7	6	5	4	3	2	1	0
RSAR1	A15	A14	A13	A12	A11	A10	A9	A8

	7	6	5	4	3	2	1	0
RSAR0	A7	A6	A5	A4	A3	A2	A1	A0

6.4.3.2 REMOTE BYTE COUNT REGISTERS (RBCR0,1)

	7	6	5	4	3	2	1	0
RBCR1	BC15	BC14	BC13	BC12	BC11	BC10	BC9	BC8

	7	6	5	4	3	2	1	0
RBCR0	BC7	BC6	BC5	BC4	BC3	BC2	BC1	BC0

Note:

RSAR0 programs the start address bits A0–A7.
RSAR1 programs the start address bits A8–A15.
Address incremented by two for word transfers, and by one for byte transfers.
Byte Count decremented by two for word transfers and by one for byte transfers.
RBCR0 programs LSB byte count.
RBCR1 programs MSB byte count.

CURRENT REMOTE DMA ADDRESS (CRDA0, CRDA1)

The Current Remote DMA Registers contain the current address of the Remote DMA. The bit assignment is shown below:

	7	6	5	4	3	2	1	0
CRDA1	A15	A14	A13	A12	A11	A10	A9	A8

	7	6	5	4	3	2	1	0
CRDA0	A7	A6	A5	A4	A3	A2	A1	A0

10.8 PHYSICAL ADDRESS REGISTERS (PAR0–PAR5)

The physical address registers are used to compare the destination address of incoming packets for rejecting or accepting packets. Comparisons are performed on a byte-wide basis. The bit assignment shown below relates the sequence in PAR0–PAR5 to the bit sequence of the received packet.

	D7	D6	D5	D4	D3	D2	D1	D0
PAR0	DA7	DA6	DA5	DA4	DA3	DA2	DA1	DA0
PAR1	DA15	DA14	DA13	DA12	DA11	DA10	DA9	DA8
PAR2	DA23	DA22	DA21	DA20	DA19	DA18	DA17	DA16
PAR3	DA31	DA30	DA29	DA28	DA27	DA26	DA25	DA24
PAR4	DA39	DA38	DA37	DA36	DA35	DA34	DA33	DA32
PAR5	DA47	DA46	DA45	DA44	DA43	DA42	DA41	DA40

					Destination Address				Source
P/S	DA0	DA1	DA2	DA3	. . . . .	DA46	DA47	SA0	. . .

Note:
P/S = Preamble, Synch
DA0 = Physical/Multicast Bit

10.9 MULTICAST ADDRESS REGISTERS (MAR0–MAR7)

The multicast address registers provide filtering of multicast addresses hashed by the CRC logic. All destination addresses are fed through the CRC logic and as the last bit of the destination address enters the CRC, the 6 most significant bits of the CRC generator are latched. These 6 bits are then decoded by a 1 of 64 decode to index a unique filter bit (FB0–63) in the multicast address registers. If the filter bit selected is set, the multicast packet is accepted. The system designer would use a program to determine which filter bits to set in the multicast registers. All multicast filter bits that correspond to multicast address accepted by the node are then set to one. To accept all multicast packets all of the registers are set to all ones.

Note: Although the hashing algorithm does not guarantee perfect filtering of multicast address, it will perfectly filter up to 64 multicast addresses if these addresses are chosen to map into unique locations in the multicast filter.

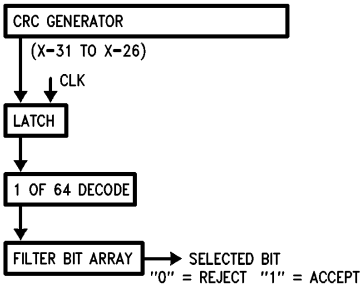

TL/F/8582–62

10.0 Internal Registers (Continued)

	D7	D6	D5	D4	D3	D2	D1	D0
MAR0	FB7	FB6	FB5	FB4	FB3	FB2	FB1	FB0
MAR1	FB15	FB14	FB13	FB12	FB11	FB10	FB9	FB8
MAR2	FB23	FB22	FB21	FB20	FB19	FB18	FB17	FB16
MAR3	FB31	FB30	FB29	FB28	FB27	FB26	FB25	FB24
MAR4	FB39	FB38	FB37	FB36	FB35	FB34	FB33	FB32
MAR5	FB47	FB46	FB45	FB44	FB43	FB42	FB41	FB40
MAR6	FB55	FB54	FB53	FB52	FB51	FB50	FB49	FB48
MAR7	FB63	FB62	FB61	FB60	FB59	FB58	FB57	FB56

If address Y is found to hash to the value 32 (20H), then FB32 in MAR4 should be initialized to ''1''. This will cause the NIC to accept any multicast packet with the address Y.

NETWORK TALLY COUNTERS

Three 8-bit counters are provided for monitoring the number of CRC errors, Frame Alignment Errors and Missed Packets. The maximum count reached by any counter is 192 (C0H). These registers will be cleared when read by the CPU. The count is recorded in binary in CT0–CT7 of each Tally Register.

Frame Alignment Error Tally (CNTR0)

This counter is incremented every time a packet is received with a Frame Alignment Error. The packet must have been recognized by the address recognition logic. The counter is cleared after it is read by the processor.

	7	6	5	4	3	2	1	0
CNTR0	CT7	CT6	CT5	CT4	CT3	CT2	CT1	CT0

CRC Error Tally (CNTR1)

This counter is incremented every time a packet is received with a CRC error. The packet must first be recognized by the address recognition logic. The counter is cleared after it is read by the processor.

	7	6	5	4	3	2	1	0
CNTR1	CT7	CT6	CT5	CT4	CT3	CT2	CT1	CT0

Frames Lost Tally Register (CNTR2)

This counter is incremented if a packet cannot be received due to lack of buffer resources. In monitor mode, this counter will count the number of packets that pass the address recognition logic.

	7	6	5	4	3	2	1	0
CNTR2	CT7	CT6	CT5	CT4	CT3	CT2	CT1	CT0

FIFO

This is an eight bit register that allows the CPU to examine the contents of the FIFO after loopback. The FIFO will contain the last 8 data bytes transmitted in the loopback packet. Sequential reads from the FIFO will advance a pointer in the FIFO and allow reading of all 8 bytes.

	7	6	5	4	3	2	1	0
FIFO	DB7	DB6	DB5	DB4	DB3	DB2	DB1	DB0

Note: The FIFO should only be read when the NIC has been programmed in loopback mode.

NUMBER OF COLLISIONS (NCR)

This register contains the number of collisions a node experiences when attempting to transmit a packet. If no collisions are experienced during a transmission attempt, the COL bit of the TSR will not be set and the contents of NCR will be zero. If there are excessive collisions, the ABT bit in the TSR will be set and the contents of NCR will be zero. The NCR is cleared after the TXP bit in the CR is set.

	7	6	5	4	3	2	1	0
NCR	—	—	—	—	NC3	NC2	NC1	NC0

11.0 Initialization Procedures

The NIC must be initialized prior to transmission or reception of packets from the network. Power on reset is applied to the NIC's reset pin. This clears/sets the following bits:

Register	Reset Bits	Set Bits
Command Register (CR)	TXP, STA	RD2, STP
Interrupt Status (ISR)		RST
Interrupt Mask (IMR)	All Bits	
Data Control (DCR)		LAS
Transmit Config. (TCR)	LB1, LB0	

The NIC remains in its reset state until a Start Command is issued. This guarantees that no packets are transmitted or received and that the NIC remains a bus slave until all appropriate internal registers have been programmed. After initialization the STP bit of the command register is reset and packets may be received and transmitted.

Initialization Sequence

The following initialization procedure is mandatory.

1) Program Command Register for Page 0 (Command Register = 21H)
2) Initialize Data Configuration Register (DCR)
3) Clear Remote Byte Count Registers (RBCR0, RBCR1)
4) Initialize Receive Configuration Register (RCR)
5) Place the NIC in LOOPBACK mode 1 or 2 (Transmit Configuration Register = 02H or 04H)
6) Initialize Receive Buffer Ring: Boundary Pointer (BNDRY), Page Start (PSTART), and Page Stop (PSTOP)
7) Clear Interrupt Status Register (ISR) by writing 0FFh to it.
8) Initialize Interrupt Mask Register (IMR)
9) Program Command Register for page 1 (Command Register = 61H)
   i)Initialize Physical Address Registers (PAR0-PAR5)
   ii)Initialize Multicast Address Registers (MAR0-MAR7)
   iii)Initialize CURRent pointer
10) Put NIC in START mode (Command Register = 22H). The local receive DMA is still not active since the NIC is in LOOPBACK.
11) Initialize the Transmit Configuration for the intended value. The NIC is now ready for transmission and reception.

11.0 Initialization Procedures

(Continued)

Before receiving packets, the user must specify the location of the Receive Buffer Ring. This is programmed in the Page Start and Page Stop Registers. In addition, the Boundary and Current Page Registers must be initialized to the value of the Page Start Register. These registers will be modified during reception of packets.

12.0 Loopback Diagnostics

Three forms of local loopback are provided on the NIC. The user has the ability to loopback through the deserializer on the DP8390D NIC, through the DP8391 SNI, and to the coax to check the link through the transceiver circuitry. **Because of the half duplex architecture of the NIC, loopback testing is a special mode of operation with the following restrictions:**

Restrictions During Loopback

The FIFO is split into two halves, one used for transmission the other for reception. Only 8-bit fields can be fetched from memory so two tests are required for 16-bit systems to verify integrity of the entire data path. During loopback the maximum latency from the assertion of BREQ to BACK is 2.0 μs. Systems that wish to use the loopback test yet do not meet this latency can limit the loopback packet to 7 bytes without experiencing underflow. Only the last 8 bytes of the loopback packet are retained in the FIFO. The last 8 bytes can be read through the FIFO register which will advance through the FIFO to allow reading the receive packet sequentially.

DESTINATION ADDRESS	= (6 bytes) Station Physical Address
SOURCE ADDRESS	|
LENGTH	2 bytes
DATA	= 46 to 1500 bytes
CRC	Appended by NIC if CRC = "0" in TCR

When in word-wide mode with Byte Order Select set, the loopback packet must be assembled in the even byte locations as shown below. (The loopback only operates with byte wide transfers.)

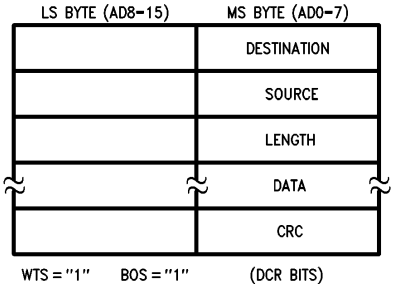

TL/F/8582–15

When in word-wide mode with Byte Order Select low, the following format must be used for the loopback packet.

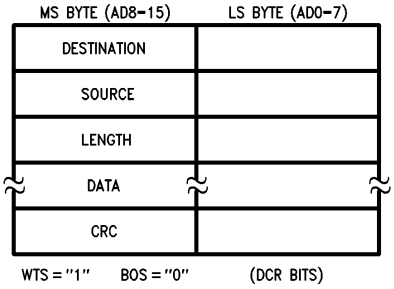

TL/F/8582–16

Note: When using loopback in word mode 2n bytes must be programmed in TBCR0, 1. Where n = actual number of bytes assembled in even or odd location.

To initiate a loopback the user first assembles the loopback packet then selects the type of loopback using the Transmit Configuration register bits LB0, LB1. The transmit configuration register must also be set to enable or disable CRC generation during transmission. The user then issues a normal transmit command to send the packet. During loopback the receiver checks for an address match and if CRC bit in the TCR is set, the receiver will also check the CRC. The last 8 bytes of the loopback packet are buffered and can be read out of the FIFO using the FIFO read port.

Loopback Modes

MODE 1: Loopback Through the Controller (LB1 = 0, LB0 = 1).

If the loopback is through the NIC then the serializer is simply linked to the deserializer and the receive clock is derived from the transmit clock.

MODE 2: Loopback Through the SNI (LB1 = 1, LB0 = 0).

If the loopback is to be performed through the SNI, the NIC provides a control (LPBK) that forces the SNI to loopback all signals.

MODE 3: Loopback to Coax (LB1 = 1, LB0 = 1).

Packets can be transmitted to the coax in loopback mode to check all of the transmit and receive paths and the coax itself.

Note: In MODE 1, CRS and COL lines are not indicated in any status register, but the NIC will still defer if these lines are active. In MODE 2, COL is masked and in MODE 3 CRS and COL are not masked. It is not possible to go directly between the loopback modes, it is necessary to return to normal operation (00H) when changing modes.

Reading the Loopback Packet

The last eight bytes of a received packet can be examined by 8 consecutive reads of the FIFO register. The FIFO pointer is incremented after the rising edge of the CPU's read strobe by internally synchronizing and advancing the pointer. This may take up to four bus clock cycles, if the pointer has not been incremented by the time the CPU reads the FIFO register again, the NIC will insert wait states

Note: The FIFO may only be read during Loopback. Reading the FIFO at any other time will cause the NIC to malfunction.

12.0 Loopback Diagnostics (Continued)

Alignment of the Received Packet in the FIFO

Reception of the packet in the FIFO begins at location zero, after the FIFO pointer reaches the last location in the FIFO, the pointer wraps to the top of the FIFO overwriting the previously received data. This process continues until the last byte is received. The NIC then appends the received byte count in the next two locations of the FIFO. The contents of the Upper Byte Count are also copied to the next FIFO location. The number of bytes used in the loopback packet determines the alignment of the packet in the FIFO. The alignment for a 64-byte packet is shown below.

FIFO LOCATION	FIFO CONTENTS		
0	LOWER BYTE COUNT	→	First Byte Read
1	UPPER BYTE COUNT	→	Second Byte Read
2	UPPER BYTE COUNT		•
3	LAST BYTE		•
4	CRC1		•
5	CRC2		•
6	CRC3		•
7	CRC4	→	Last Byte Read

For the following alignment in the FIFO the packet length should be (N × 8) + 5 Bytes. Note that if the CRC bit in the TCR is set, CRC will not be appended by the transmitter. If the CRC is appended by the transmitter, the last four bytes, bytes N-3 to N, correspond to the CRC.

FIFO LOCATION	FIFO CONTENTS		
0	BYTE N-4	→	First Byte Read
1	BYTE N-3 (CRC1)	AR	Second Byte Read
2	BYTE N-2 (CRC2)		•
3	BYTE N-1 (CRC3)		•
4	BYTE N (CRC4)		•
5	LOWER BYTE COUNT		•
6	UPPER BYTE COUNT	→	Last Byte Read
7	UPPER BYTE COUNT		

LOOPBACK TESTS

Loopback capabilities are provided to allow certain tests to be performed to validate operation of the DP8390D NIC prior to transmitting and receiving packets on a live network. Typically these tests may be performed during power up of a node. The diagnostic provides support to verify the following:

1) Verify integrity of data path. Received data is checked against transmitted data.
2) Verify CRC logic's capability to generate good CRC on transmit, verify CRC on receive (good or bad CRC).
3) Verify that the Address Recognition Logic can
   a) Recognize address match packets
   b) Reject packets that fail to match an address

LOOPBACK OPERATION IN THE NIC

Loopback is a modified form of transmission using only half of the FIFO. This places certain restrictions on the use of loopback testing. When loopback mode is selected in the TCR, the FIFO is split. A packet should be assembled in memory with programming of TPSR and TBCR0,TBCR1 registers. When the transmit command is issued the following operations occur:

Transmitter Actions

1) Data is transferred from memory by the DMA until the FIFO is filled. For each transfer TBCR0 and TBCR1 are decremented. (Subsequent burst transfers are initiated when the number of bytes in the FIFO drops below the programmed threshold.)
2) The NIC generates 56 bits of preamble followed by an 8-bit synch pattern.
3) Data transferred from FIFO to serializer.
4) If CRC = 1 in TCR, no CRC calculated by NIC, the last byte transmitted is the last byte from the FIFO (Allows software CRC to be appended). If CRC = 0, NIC calculates and appends four bytes of CRC.
5) At end of Transmission PTX bit set in ISR.

Receiver Actions

1) Wait for synch, all preamble stripped.
2) Store packet in FIFO, increment receive byte count for each incoming byte.
3) If CRC = 0 in TCR, receiver checks incoming packet for CRC errors. If CRC = 1 in TCR, receiver does not check CRC errors, CRC error bit always set in RSR (for address matching packets).
4) At end of receive, receive byte count written into FIFO, receive status register is updated. The PRX bit is typically set in the RSR even if the address does not match. If CRC errors are forced, the packet must match the address filters in order for the CRC error bit in the RS to be set.

EXAMPLES

The following examples show what results can be expected from a properly operating NIC during loopback. The restrictions and results of each type of loopback are listed for reference. The loopback tests are divided into two sets of tests. One to verify the data path, CRC generation and byte count through all three paths. The second set of tests uses internal loopback to verify the receiver's CRC checking and address recognition. For all of the tests the DCR was programmed to 40h.

PATH	TCR	RCR	TSR	RSR	ISR
NIC Internal	02	00	53(1)	02(2)	02(3)

Note 1: Since carrier sense and collision detect inputs are blocked during internal loopback, carrier and CD heartbeat are not seen and the CRS and CDH bits are set.

Note 2: CRC errors are always indicated by receiver if CRC is appended by the transmitter.

Note 3: Only the PTX bit in the ISR is set, the PRX bit is only set if status is written to memory. In loopback this action does not occur and the PRX bit remains 0 for all loopback modes.

Note 4: All values are hex.

12.0 Loopback Diagnostics (Continued)

PATH	TCR	RCR	TSR	RSR	ISR
NIC External	04	00	43(1)	02	02

Note 1: CDH is set, CRS is not set since it is generated by the external encoder/decoder.

PATH	TCR	RCR	TSR	RSR	ISR
NIC External	06	00	03(1)	02	02(2)

Note 1: CDH and CRS should not be set. The TSR however, could also contain 01H,03H,07H and a variety of other values depending on whether collisions were encountered or the packet was deferred.

Note 2. Will contain 08H if packet is not transmittable.

Note 3: During external loopback the NIC is now exposed to network traffic, it is therefore possible for the contents of both the Receive portion of the FIFO and the RSR to be corrupted by any other packet on the network. Thus in a live network the contents of the FIFO and RSR should not be depended on. The NIC will still abide by the standard CSMA/CD protocol in external loopback mode. (i.e. The network will not be disturbed by the loopback packet).

Note 4: All values are hex.

CRC AND ADDRESS RECOGNITION

The next three tests exercise the address recognition logic and CRC. These tests should be performed using internal loopback only so that the NIC is isolated from interference from the network. These tests also require the capability to generate CRC in software.

The address recognition logic cannot be directly tested. The CRC and FAE bits in the RSR are only set if the address of the packet matches the address filters. If errors are expected to be set and they are not set, the packet has been rejected on the basis of an address mismatch. The following sequence of packets will test the address recognition logic. The DCR should be set to 40H, the TCR should be set to 03H with a software generated CRC.

Packet Contents			Results
Test	Address	CRC	RSR
Test A	Matching	Good	01(1)
Test B	Matching	Bad	02(2)
Test C	Non-Matching	Bad	01

Note 1: Status will read 21H if multicast address used.

Note 2: Status will read 22H if multicast address used.

Note 3: In test A, the RSR is set up. In test B the address is found to match since the CRC is flagged as bad. Test C proves that the address recognition logic can distinguish a bad address and does not notify the RSR of the bad CRC. The receiving CRC is proven to work in test A and test B.

Note 4: All values are hex.

NETWORK MANAGEMENT FUNCTIONS

Network management capabilities are required for maintenance and planning of a local area network. The NIC supports the minimum requirement for network management in hardware, the remaining requirements can be met with software counts. There are three events that software alone can not track during reception of packets: CRC errors, Frame Alignment errors, and missed packets.

Since errored packets can be rejected, the status associated with these packets is lost unless the CPU can access the Receive Status Register before the next packet arrives. In situations where another packet arrives very quickly, the CPU may have no opportunity to do this. The NIC counts the number of packets with CRC errors and Frame Alignment errors. 8-bit counters have been selected to reduce overhead. The counters will generate interrupts whenever their MSBs are set so that a software routine can accumulate the network statistics and reset the counters before overflow occurs. The counters are sticky so that when they reach a count of 192 (C0H) counting is halted. An additional counter is provided to count the number of packets NIC misses due to buffer overflow or being offline.

The structure of the counters is shown below:

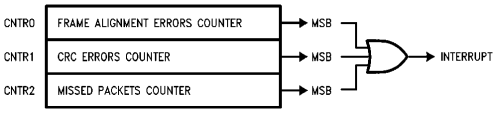

TL/F/8582–63

Additional information required for network management is available in the Receive and Transmit Status Registers. Transmit status is available after each transmission for information regarding events during transmission.

Typically, the following statistics might be gathered in software:

Traffic: Frames Sent OK
Frames Received OK
Multicast Frames Received
Packets Lost Due to Lack of Resources
Retries/Packet

Errors: CRC Errors
Alignment Errors
Excessive Collisions
Packet with Length Errors
Heartbeat Failure

13.0 Bus Arbitration and Timing

The NIC operates in three possible modes:

- BUS MASTER (WHILE PERFORMING DMA)
- BUS SLAVE (WHILE BEING ACCESSED BY CPU)
- IDLE

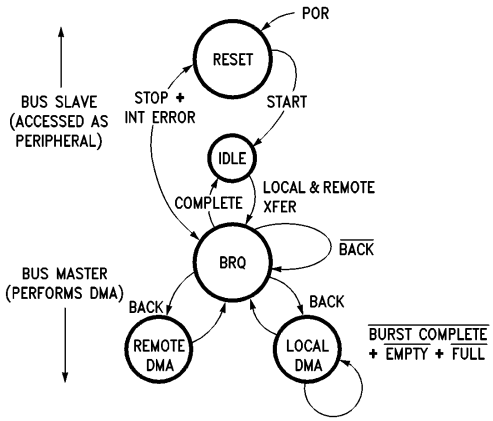

TL/F/8582–64

Upon power-up the NIC is in an indeterminant state. After receiving a Hardware Reset the NIC comes up as a slave in the Reset State. The receiver and transmitter are both disabled in this state. The reset state can be reentered under three conditions, soft reset (Stop Command), hard reset (RESET input) or an error that shuts down the receiver or transmitter (FIFO underflow or overflow). After initialization of registers, the NIC is issued a Start command and the NIC enters Idle state. Until the DMA is required the NIC remains in an idle state. The idle state is exited by a request from the FIFO in the case of receive or transmit, or from the Remote/DMA in the case of Remote DMA operation. After acquiring the bus in a BREQ/BACK handshake the Remote or Local DMA transfer is completed and the NIC reenters the idle state.

DMA TRANSFERS TIMING

The DMA can be programmed for the following types of transfers:

16-Bit Address, 8-bit Data Transfer
16-Bit Address, 16-bit Data Transfer
32-Bit Address, 8-bit Data Transfer
32-Bit Address, 16-bit Data Transfer

All DMA transfers use BSCK for timing. 16-Bit Address modes require 4 BSCK cycles as shown below:

16-Bit Address, 8-Bit Data

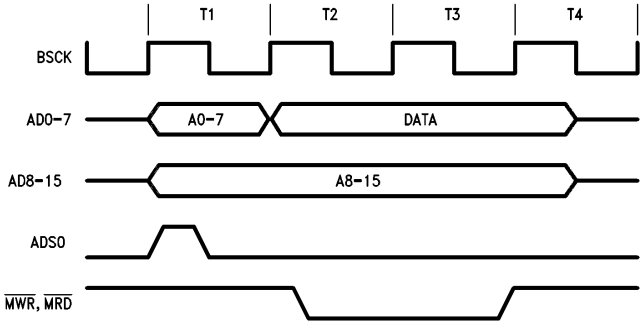

TL/F/8582–65

13.0 Bus Arbitration and Timing (Continued)

16-Bit Address, 16-Bit Data

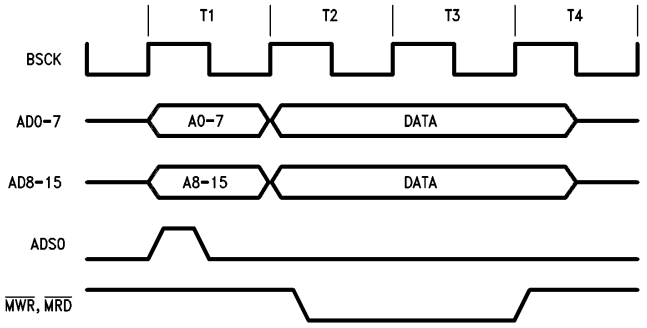

TL/F/8582–66

32-Bit Address, 8-Bit Data

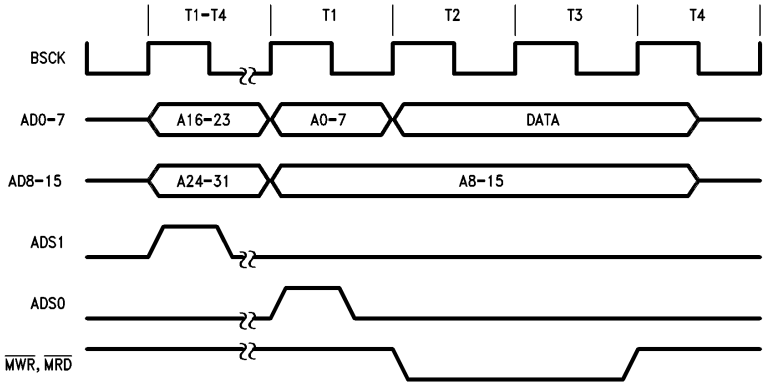

TL/F/8582–67

32-Bit Address, 16-Bit Data

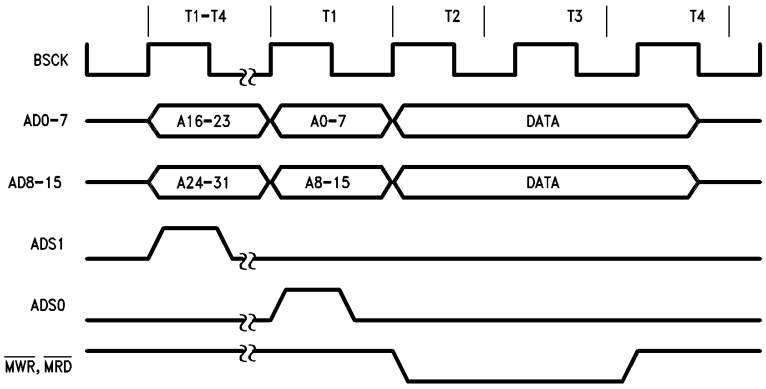

TL/F/8582–68

Note: In 32-bit address mode, ADS1 is at TRI-STATE after the first T1–T4 states; thus, a 4.7k pull-down resistor is required for 32-bit address mode.

13.0 Bus Arbitration and Timing (Continued)

When in 32-bit mode four additional BSCK cycles are required per burst. The first bus cycle (T1′–T4′) of each burst is used to output the upper 16-bit addresses. This 16-bit address is programmed in RSAR0 and RSAR1 and points to a 64k page of system memory. All transmitted or received packets are constrained to reside within this 64k page.

FIFO BURST CONTROL

All Local DMA transfers are burst transfers, once the DMA requests the bus and the bus is acknowledged, the DMA will transfer an exact burst of bytes programmed in the Data Configuration Register (DCR) then relinquish the bus. If there are remaining bytes in the FIFO the next burst will not be initiated until the FIFO threshold is exceeded. If BACK is removed during the transfer, the burst transfer will be aborted. **(DROPPING BACK DURING A DMA CYCLE IS NOT RECOMMENDED.)**

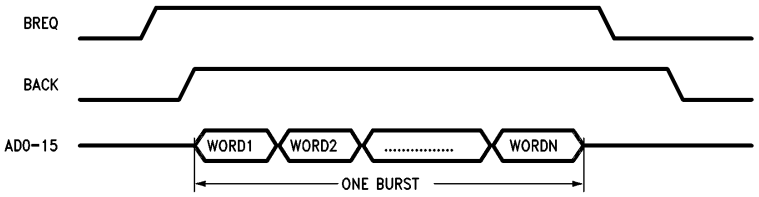

TL/F/8582–69

where N = 1, 2, 4, or 6 Words or N = 2, 4, 8, or 12 Bytes when in byte mode

INTERLEAVED LOCAL OPERATION

If a remote DMA transfer is initiated or in progress when a packet is being received or transmitted, the Remote DMA transfer will be interrupted for higher priority Local DMA transfers. When the Local DMA transfer is completed the Remote DMA will rearbitrate for the bus and continue its transfers. This is illustrated below:

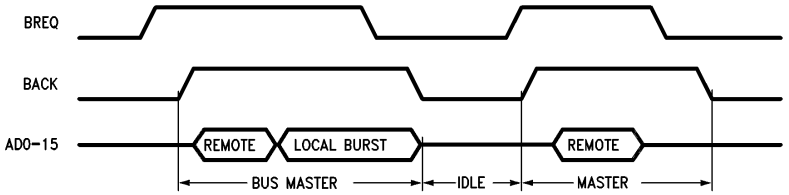

TL/F/8582–70

Note that if the FIFO requires service while a remote DMA is in progress, BREQ is not dropped and the Local DMA burst is appended to the Remote Transfer. When switching from a local transfer to a remote transfer, however, BREQ is dropped and raised again. This allows the CPU or other devices to fairly contend for the bus.

REMOTE DMA-BIDIRECTIONAL PORT CONTROL

The Remote DMA transfers data between the local buffer memory and a bidirectional port (memory to I/O transfer). This transfer is arbited on a byte by byte basis versus the burst transfer used for Local DMA transfers. This bidirectional port is also read/written by the host. All transfers through this port are asynchronous. At any one time transfers are limited to one direction, either from the port to local buffer memory (Remote Write) or from local buffer memory to the port (Remote Read).

Bus Handshake Signals for Remote DMA Transfers

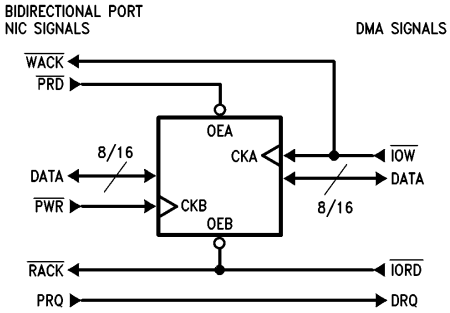

TL/F/8582–71

13.0 Bus Arbitration and Timing (Continued)

REMOTE READ TIMING

1) The DMA reads byte/word from local buffer memory and writes byte/word into latch, increments the DMA address and decrements the byte count (RBCR0,1).
2) A Request Line (PRQ) is asserted to inform the system that a byte is available.
3) The system reads the port, the read strobe ($\overline{RACK}$) is used as an acknowledge by the Remote DMA and it goes back to step 1.

Steps 1–3 are repeated until the remote DMA is complete.

Note that in order for the Remote DMA to transfer a byte from memory to the latch, it must arbitrate access to the local bus via a BREQ, BACK handshake. After each byte or word is transferred to the latch, BREQ is dropped. If a Local DMA is in progress, the Remote DMA is held off until the local DMA is complete.

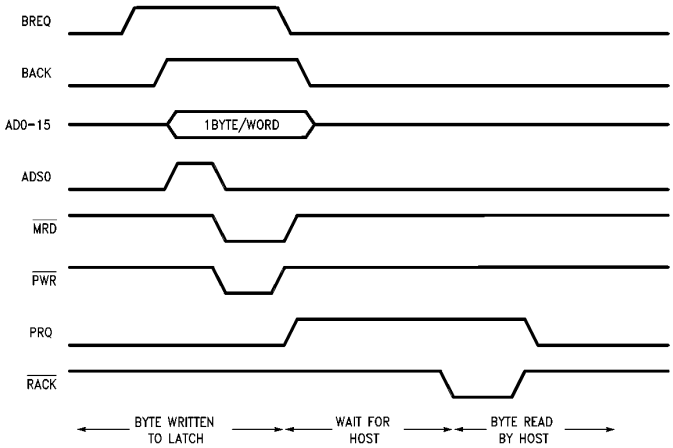

TL/F/8582–72

REMOTE WRITE TIMING

A Remote Write operation transfers data from the I/O port to the local buffer RAM. The NIC initiates a transfer by requesting a byte/word via the PRQ. The system transfers a byte/word to the latch via $\overline{IOW}$, this write strobe is detected by the NIC and PRQ is removed. By removing the PRQ, the Remote DMA holds off further transfers into the latch until the current byte/word has been transferred from the latch, PRQ is reasserted and the next transfer can begin.

1) NIC asserts PRQ. System writes byte/word into latch. NIC removes PRQ.
2) Remote DMA reads contents of port and writes byte/word to local buffer memory, increments address and decrements byte count (RBCR0,1).
3) Go back to step 1.

Steps 1–3 are repeated until the remote DMA is complete.

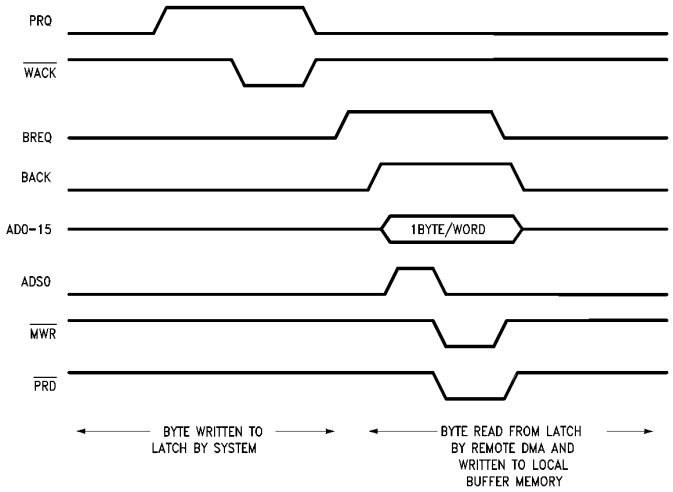

TL/F/8582–73

13.0 Bus Arbitration and Timing (Continued)

SLAVE MODE TIMING

When $\overline{CS}$ is low, the NIC becomes a bus slave. The CPU can then read or write any internal registers. All register access is byte wide. The timing for register access is shown below. The host CPU accesses internal registers with four address lines, RA0–RA3, $\overline{SRD}$ and $\overline{SWR}$ strobes. ADS0 is used to latch the address when interfacing to a multiplexed, address data bus. Since the NIC may be a local bus master when the host CPU attempts to read or write to the controller, an $\overline{ACK}$ line is used to hold off the CPU until the NIC leaves master mode. Some number of BSCK cycles is also required to allow the NIC to synchronize to the read or write cycle.

Write to Register

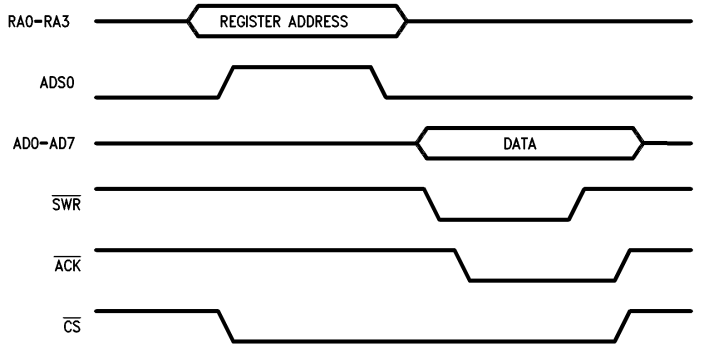

TL/F/8582–74

Read from Register

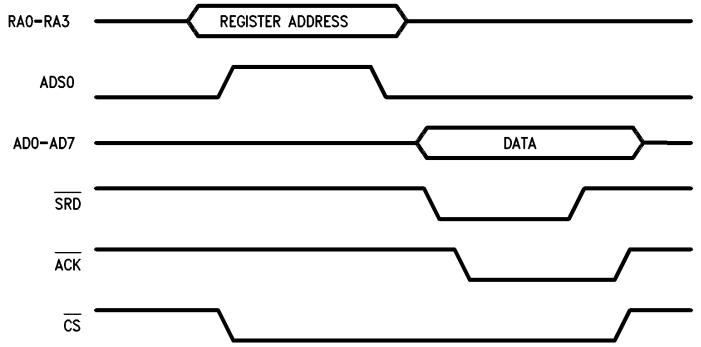

TL/F/8582–75

TIME BETWEEN CHIP SELECTS

The NIC requires that successive chip selects be no closer than 4 bus clocks (BSCK) together, below. If the condition is violated, the NIC may glitch/ACK. CPUs that operate from pipelined instructions (i.e. 386) or have a cache (i.e. 486) can execute consecutive I/O cycles very quickly. The solution is to delay the execution of consecutive I/O cycles by either breaking the pipeline or forcing the CPU to access outisde it's cache.

Time between Chip Selects

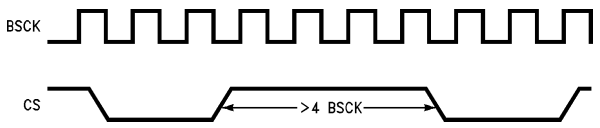

TL/F/8582–A1

14.0 Preliminary Electrical Characteristics

Absolute Maximum Ratings

If Military/Aerospace specified devices are required, please contact the National Semiconductor Sales Office/Distributors for availability and specifications.

Supply Voltage (V_{CC})	−0.5V to +7.0V
DC Input Voltage (V_{IN})	−0.5V to V_{CC} + 0.5V
DC Output Voltage (V_{OUT})	−0.5V to V_{CC} + 0.5V
Storage Temperature Range (T_{STG})	−65°C to +150°C
Power Dissipation (PD)	500 mW
Lead Temp. (TL) (Soldering, 10 sec.)	260°C
ESD rating (R_{ZAP} = 1.5k, C_{ZAP} = 120 pF)	1600V

Preliminary DC Specifications T_A = 0°C to 70°C, V_{CC} = 5V ±5%, unless otherwise specified

Symbol	Parameter	Conditions	Min	Max	Units
V_{OH}	Minimum High Level Output Voltage (Notes 1, 4)	I_{OH} = −20 μA I_{OH} = −2.0 mA	V_{CC} − 0.1 3.5		V V
V_{OL}	Minimum Low Level Output Voltage (Notes 1, 4)	I_{OL} = 20 μA I_{OL} = 2.0 mA		0.1 0.4	V V
V_{IH}	Minimum High Level Input Voltage (Note 2)		2.0		V
V_{IH2}	Minimum High Level Input Voltage for RACK, WACK (Note 2)		2.7		V
V_{IL}	Minimum Low Level Input Voltage (Note 2)			0.8	V
V_{IL2}	Minimum Low Level Input Voltage For RACK, WACK (Note 2)			0.6	V
I_{IN}	Input Current	V_I = V_{CC} or GND	−1.0	+1.0	μA
I_{OZ}	Maximum TRI-STATE Output Leakage Current	V_{OUT} = V_{CC} or GND	−10	+10	μA
I_{CC}	Average Supply Current (Note 3)	TXCK = 10 MHz RXCK = 10 MHz BSCK = 20 MHz I_{OUT} = 0 μA V_{IN} = V_{CC} or GND		40	mA

Note 1: These levels are tested dynamically using a limited amount of functional test patterns, please refer to AC Test Load.

Note 2: Limited functional test patterns are performed at these input levels. The majority of functional tests are performed at levels of 0V and 3V.

Note 3: This is measured with a 0.1 μF bypass capacitor between V_{CC} and GND.

Note 4: The low drive CMOS compatible V_{OH} and V_{OL} limits are not tested directly. Detailed device characterization validates that this specification can be guaranteed by testing the high drive TTL compatible V_{OL} and V_{OH} specification.

15.0 Switching Characteristics AC Specs DP8390D **Note:** All Timing is Preliminary

Register Read (Latched Using ADS0)

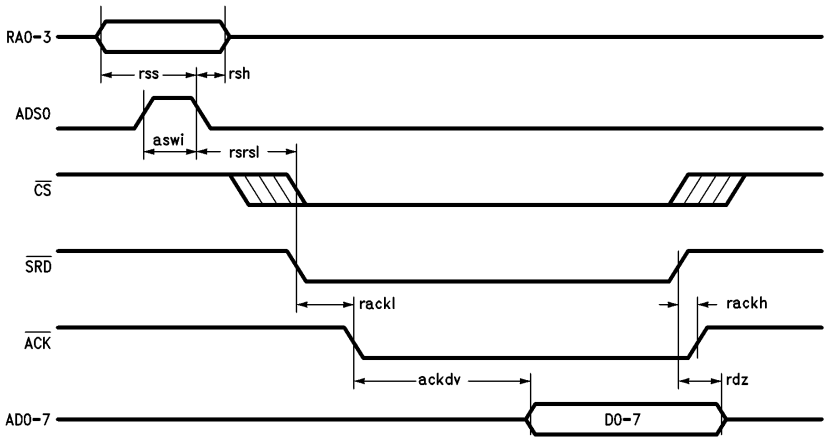

TL/F/8582–76

Symbol	Parameter	Min	Max	Units
rss	Register Select Setup to ADS0 Low	10		ns
rsh	Register Select Hold from ADS0 Low	13		ns
aswi	Address Strobe Width In	15		ns
ackdv	Acknowledge Low to Data Valid		55	ns
rdz	Read Strobe to Data TRI-STATE	15	70	ns
rackl	Read Strobe to $\overline{ACK}$ Low (Notes 1, 3)		n*bcyc + 30	ns
rackh	Read Strobe to $\overline{ACK}$ High		30	ns
rsrsl	Register Select to Slave Read Low, Latched RS0–3 (Note 2)	10		ns

Note 1: $\overline{ACK}$ is not generated until $\overline{CS}$ and $\overline{SRD}$ are low and the NIC has synchronized to the register access. The NIC will insert an integral number of Bus Clock cycles until it is synchronized. In Dual Bus systems additional cycles will be used for a local or remote DMA to complete. Wait states must be issued to the CPU until $\overline{ACK}$ is asserted low.

Note 2: $\overline{CS}$ may be asserted before or after $\overline{SRD}$. If $\overline{CS}$ is asserted after $\overline{SRD}$, rackl is referenced from falling edge of $\overline{CS}$. $\overline{CS}$ can be de-asserted concurrently with $\overline{SRD}$ or after $\overline{SRD}$ is de-asserted.

Note 3: These limits include the RC delay inherent in our test method. These signals typically turn off within 15 ns, enabling other devices to drive these lines with no contention.

15.0 Switching Characteristics (Continued)

Register Read (Non Latched, ADS0 = 1)

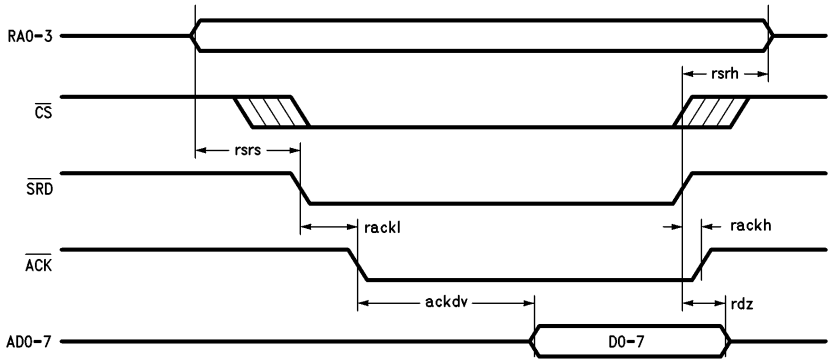

TL/F/8582–77

Symbol	Parameter	Min	Max	Units
rsrs	Register Select to Read Setup (Notes 1, 3)	10		ns
rsrh	Register Select Hold from Read	0		ns
ackdv	$\overline{ACK}$ Low to Valid Data		55	ns
rdz	Read Strobe to Data TRI-STATE (Note 2)	15	70	ns
rackl	Read Strobe to $\overline{ACK}$ Low (Note 3)		n*bcyc + 30	ns
rackh	Read Strobe to $\overline{ACK}$ High		30	ns

Note 1: rsrs includes flow-through time of latch.

Note 2: These limits include the RC delay inherent in our test method. These signals typically turn off within 15 ns enabling other devices to drive these lines with no contention.

Note 3: $\overline{CS}$ may be asserted before or after RA0–3, and $\overline{SRD}$, since address decode begins when $\overline{ACK}$ is asserted. If $\overline{CS}$ is asserted after RA0-3, and $\overline{SRD}$, rack1 is referenced from falling edge of $\overline{CS}$.

15.0 Switching Characteristics (Continued)

Register Write (Latched Using ADS0)

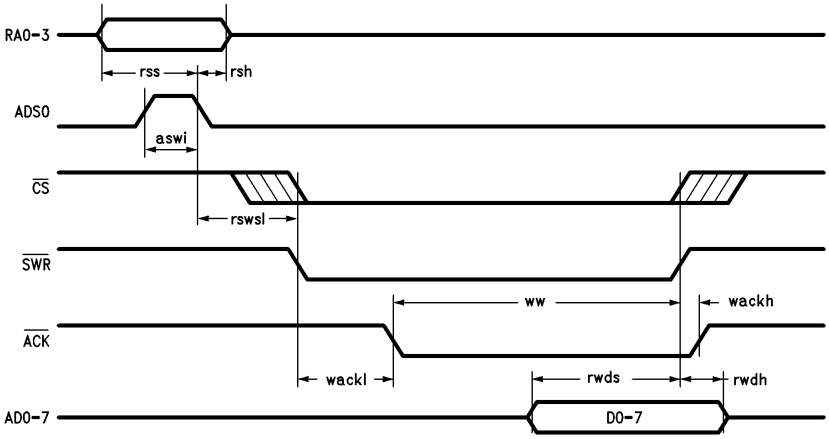

TL/F/8582–78

Symbol	Parameter	Min	Max	Units
rss	Register Select Setup to ADS0 Low	10		ns
rsh	Register Select Hold from ADS0 Low	17		ns
aswi	Address Strobe Width In	15		ns
rwds	Register Write Data Setup	20		ns
rwdh	Register Write Data Hold	21		ns
ww	Write Strobe Width from $\overline{ACK}$	50		ns
wackh	Write Strobe High to $\overline{ACK}$ High		30	ns
wackl	Write Low to $\overline{ACK}$ Low (Notes 1, 2)		n*bcyc + 30	ns
rswsl	Register Select to Write Strobe Low	10		ns

Note 1: $\overline{ACK}$ is not generated until $\overline{CS}$ and $\overline{SWR}$ are low and the NIC has synchronized to the register access. In Dual Bus Systems additional cycles will be used for a local DMA or Remote DMA to complete.

Note 2: $\overline{CS}$ may be asserted before or after $\overline{SWR}$. If $\overline{CS}$ is asserted after $\overline{SWR}$, wackl is referenced from falling edge of $\overline{CS}$.

15.0 Switching Characteristics (Continued)

Register Write (Non Latched, ADS0 = 1)

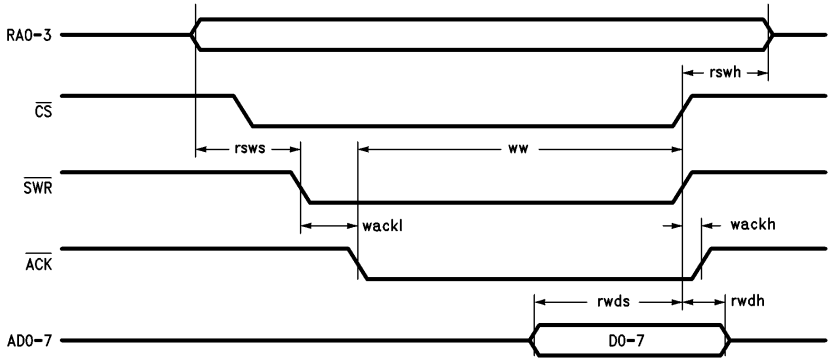

TL/F/8582–79

Symbol	Parameter	Min	Max	Units
rsws	Register Select to Write Setup (Note 1)	15		ns
rswh	Register Select Hold from Write	0		ns
rwds	Register Write Data Setup	20		ns
rwdh	Register Write Data Hold	21		ns
wackl	Write Low to $\overline{ACK}$ Low (Note 2)		n*bcyc + 30	ns
wackh	Write High to $\overline{ACK}$ High		30	ns
ww	Write Width from $\overline{ACK}$	50		ns

Note 1: Assumes ADS0 is high when RA0–3 changing.

Note 2: $\overline{ACK}$ is not generated until $\overline{CS}$ and $\overline{SWR}$ are low and the NIC has synchronized to the register access. In Dual Bus systems additional cycles will be used for a local DMA or remote DMA to complete.

15.0 Switching Characteristics (Continued)

DMA Control, Bus Arbitration

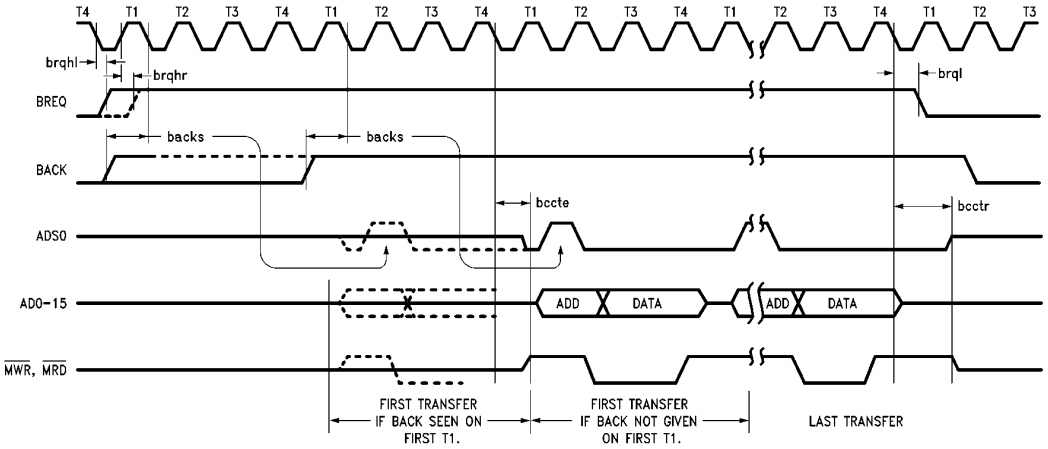

TL/F/8582–80

Symbol	Parameter	Min	Max	Units
brqhl	Bus Clock to Bus Request High for Local DMA		43	ns
brqhr	Bus Clock to Bus Request High for Remote DMA		38	ns
brql	Bus Request Low from Bus Clock		55	ns
backs	Acknowledge Setup to Bus Clock (Note 1)	2		ns
bccte	Bus Clock to Control Enable		60	ns
bcctr	Bus Clock to Control Release (Notes 2, 3)		70	ns

Note 1: BACK must be setup before T1 after BREQ is asserted. Missed setup will slip the beginning of the DMA by four bus clocks. The Bus Latency will influence the allowable FIFO threshold and transfer mode (empty/fill vs exact burst transfer).

Note 2: During remote DMA transfers only, a single bus transfer is performed. During local DMA operations burst mode transfers are performed.

Note 3: These limits include the RC delay inherent in our test method. These signals typically turn off within 15 ns enabling other devices to drive these lines with no contention.

15.0 Switching Characteristics (Continued)

DMA Address Generation

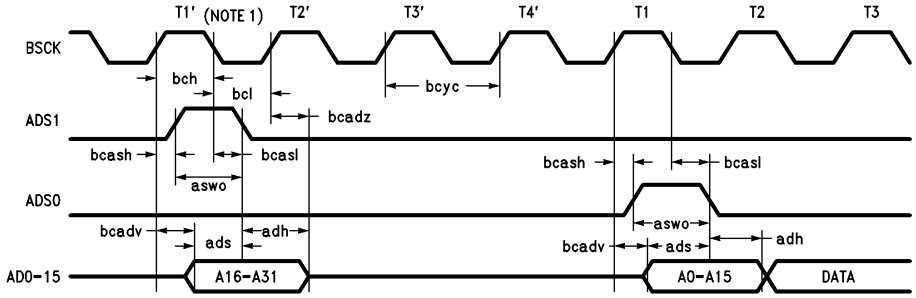

TL/F/8582–81

Symbol	Parameter	Min	Max	Units
bcyc	Bus Clock Cycle Time (Note 2)	50	1000	ns
bch	Bus Clock High Time	22.5		ns
bcl	Bus Clock Low Time	22.5		ns
bcash	Bus Clock to Address Strobe High		34	ns
bcasl	Bus Clock to Address Strobe Low		44	ns
aswo	Address Strobe Width Out	bch		ns
bcadv	Bus Clock to Address Valid		45	ns
bcadz	Bus Clock to Address TRI-STATE (Note 3)	15	55	ns
ads	Address Setup to ADS0/1 Low	bch − 15		ns
adh	Address Hold from ADS0/1 Low	bcl − 5		ns

Note 1: Cycles T1', T2', T3', T4' are only issued for the first transfer in a burst when 32-bit mode has been selected.

Note 2: The rate of bus clock must be high enough to support transfers to/from the FIFO at a rate greater than the serial network transfers from/to the FIFO.

Note 3: These limits include the RC delay inherent in our test method. These signals typically turn off within 15 ns, enabling other devices to drive these lines with no contention.

15.0 Switching Characteristics (Continued)

DMA Memory Read

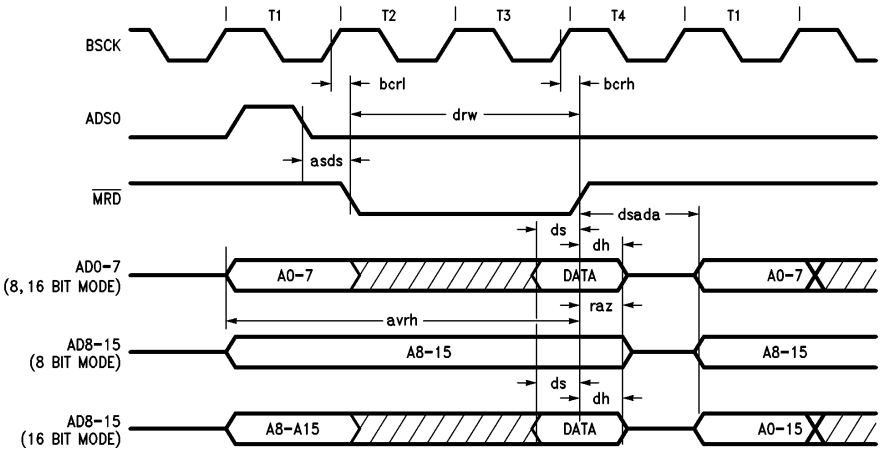

TL/F/8582–82

Symbol	Parameter	Min	Max	Units
bcrl	Bus Clock to Read Strobe Low		43	ns
bcrh	Bus Clock to Read Strobe High		40	ns
ds	Data Setup to Read Strobe High	25		ns
dh	Data Hold from Read Strobe High	0		ns
drw	DMA Read Strobe Width Out	2*bcyc − 15		ns
raz	Memory Read High to Address TRI-STATE (Notes 1, 2)		bch + 40	ns
asds	Address Strobe to Data Strobe		bcl + 10	ns
dsada	Data Strobe to Address Active	bcyc − 10		ns
avrh	Address Valid to Read Strobe High	3*bcyc − 15		ns

Note 1: During a burst A8–A15 are not TRI-STATE if byte wide transfers are selected. On the last transfer A8–A15 are TRI-STATE as shown above.

Note 2: These limits include the RC delay inherent in our test method. These signals typically turn off within bch + 15 ns, enabling other devices to drive these lines with no contention.

15.0 Switching Characteristics (Continued)

DMA Memory Write

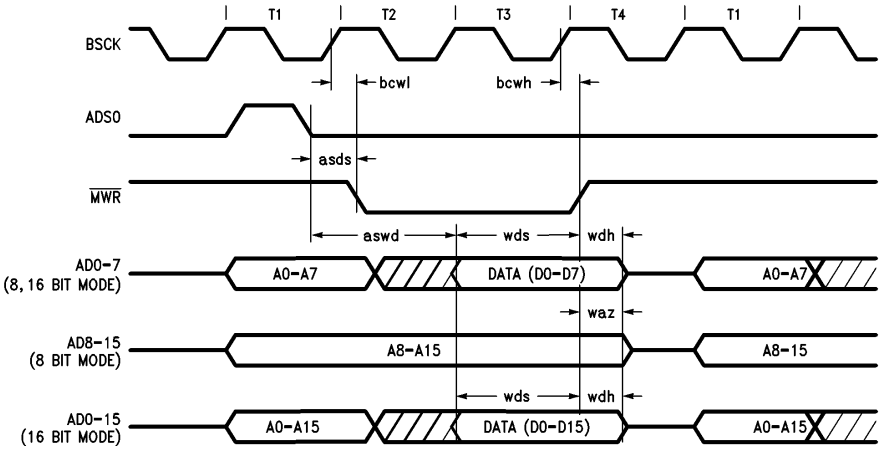

TL/F/8582-83

Symbol	Parameter	Min	Max	Units
bcwl	Bus Clock to Write Strobe Low		40	ns
bcwh	Bus Clock to Write Strobe High		40	ns
wds	Data Setup to $\overline{WR}$ High	2*bcyc − 30		ns
wdh	Data Hold from $\overline{WR}$ Low	bch + 7		ns
waz	Write Strobe to Address TRI-STATE (Notes 1, 2)		bch + 40	ns
asds	Address Strobe to Data Strobe		bcl + 10	ns
aswd	Address Strobe to Write Data Valid		bcl + 30	ns

Note 1: When using byte mode transfers A8–A15 are only TRI-STATE on the last transfer, waz timing is only valid for last transfer in a burst.

Note 2: These limits include the RC delay inherent in our test method. These signals typically turn off within bch + 15 ns, enabling other devices to drive these lines with no contention.

15.0 Switching Characteristics (Continued)

Wait State Insertion

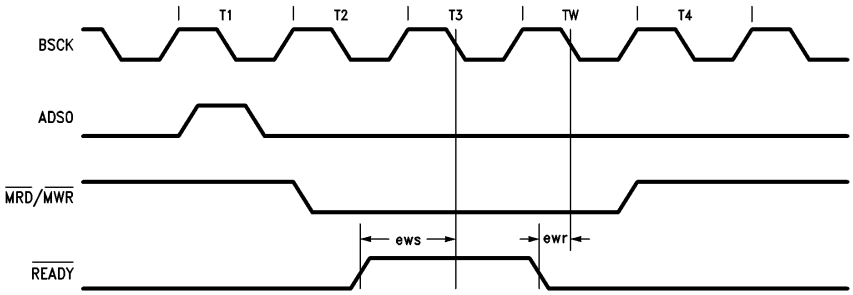

TL/F/8582–45

Symbol	Parameter	Min	Max	Units
ews	External Wait Setup to T3 ↓ Clock (Note 1)	10		ns
ewr	External Wait Release Time (Note 1)	15		ns

Note 1: The addition of wait states affects the count of deserialized bytes and is limited to a number of bus clock cycles depending on the bus clock and network rates. The allowable wait states are found in the table below. (Assumes 10 Mbit/sec data rate.)

BSCK (MHz)	# of Wait States	
	Byte Transfer	Word Transfer
8	0	1
10	0	1
12	1	2
14	1	2
16	1	3
18	2	3
20	2	4

Table assumes 10 MHz network clock.

The number of allowable wait states in byte mode can be calculated using:

$$\#W_{(\text{byte mode})} = \left(\frac{8\ \text{tnw}}{4.5\ \text{tbsck}} - 1\right)$$

#W = Number of Wait States

tnw = Network Clock Period

tbsck = BSCK Period

The number of allowable wait states in word mode can be calculated using:

$$\#W_{(\text{word mode})} = \left(\frac{5\ \text{tnw}}{2\ \text{tbsck}} - 1\right)$$

15.0 Switching Characteristics (Continued)

Remote DMA (Read, Send Command)

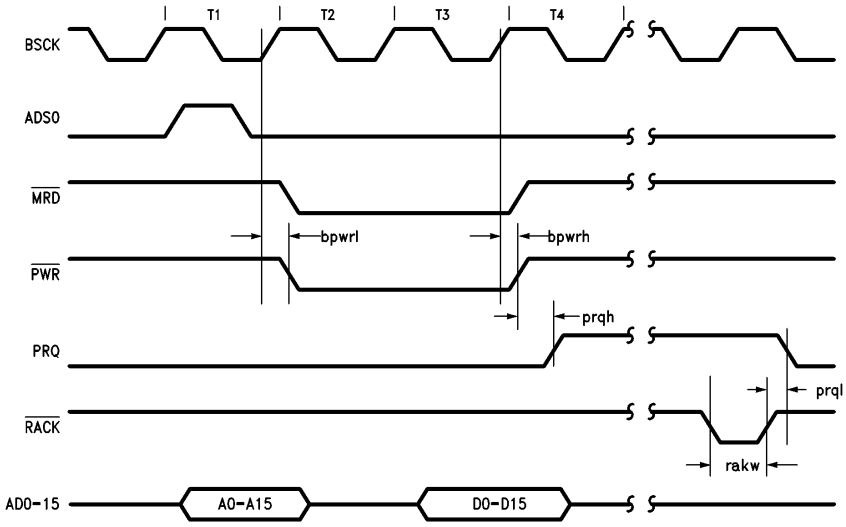

TL/F/8582-84

Symbol	Parameter	Min	Max	Units
bpwrl	Bus Clock to Port Write Low		43	ns
bpwrh	Bus Clock to Port Write High		40	ns
prqh	Port Write High to Port Request High (Note 1)		30	ns
prql	Port Request Low from Read Acknowledge High		45	ns
rakw	Remote Acknowledge Read Strobe Pulse Width	20		ns

Note 1: Start of next transfer is dependent on where $\overline{RACK}$ is generated relative to BSCK and whether a local DMA is pending.

15.0 Switching Characteristics (Continued)

Remote DMA (Read, Send Command) Recovery Time

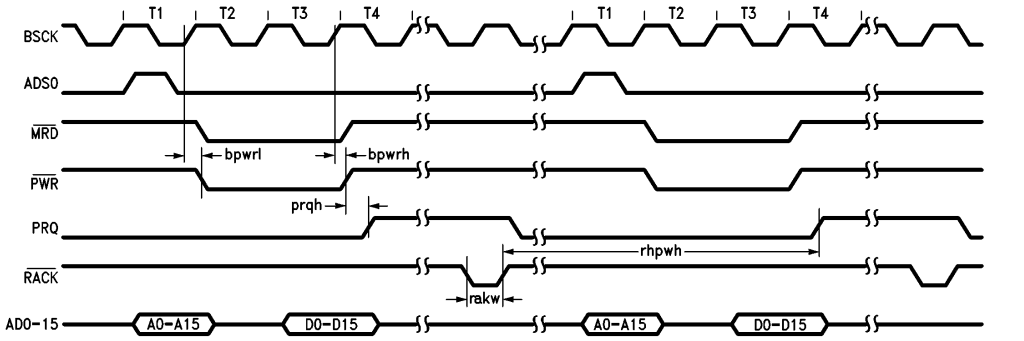

TL/F/8582–85

Symbol	Parameter	Min	Max	Units
bpwrl	Bus Clock to Port Write Low		43	ns
bpwrh	Bus Clock to Port Write High		40	ns
prqh	Port Write High to Port Request High (Note 1)		30	ns
prql	Port Request Low from Read Acknowledge High		45	ns
rakw	Remote Acknowledge Read Strobe Pulse Width	20		ns
rhpwh	Read Acknowledge High to Next Port Write Cycle (Notes 2,3,4)	11		BUSCK

Note 1: Start of next transfer is dependent on where $\overline{RACK}$ is generated relative to BSCK and whether a local DMA is pending.

Note 2: This is not a measured value but guaranteed by design.

Note 3: $\overline{RACK}$ must be high for a minimum of 7 BUSCK.

Note 4: Assumes no local DMA interleave, no $\overline{CS}$, and immediate BACK.

15.0 Switching Characteristics (Continued)

Remote DMA (Write Cycle)

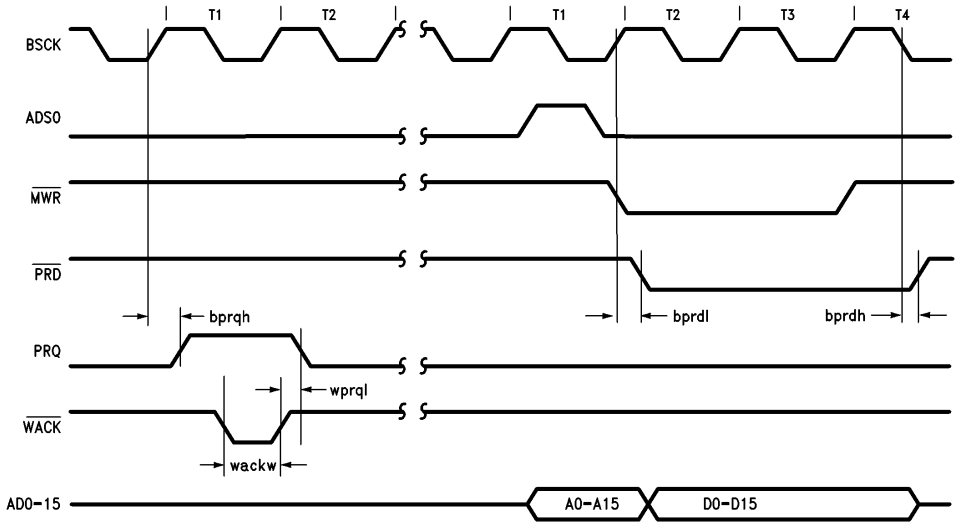

TL/F/8582-86

Symbol	Parameter	Min	Max	Units
bprqh	Bus Clock to Port Request High (Note 1)		42	ns
wprql	$\overline{\text{WACK}}$ to Port Request Low		45	ns
wackw	$\overline{\text{WACK}}$ Pulse Width	20		ns
bprdl	Bus Clock to Port Read Low (Note 2)		40	ns
bprdh	Bus Clock to Port Read High		40	ns

Note 1: The first port request is issued in response to the remote write command. It is subsequently issued on T1 clock cycles following completion of remote DMA cycles.

Note 2: The start of the remote DMA write following $\overline{\text{WACK}}$ is dependent on where $\overline{\text{WACK}}$ is issued relative to BUSCK and whether a local DMA is pending.

15.0 Switching Characteristics (Continued)

Remote DMA (Write Cycle) Recovery Time

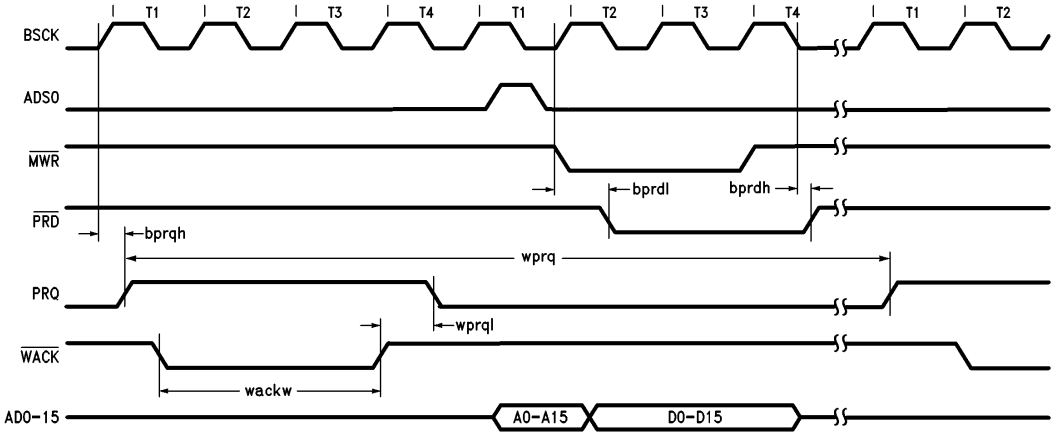

TL/F/8582–87

Symbol	Parameter	Min	Max	Units
bprqh	Bus Clock to Port Request High (Note 1)		40	ns
wprql	$\overline{\text{WACK}}$ to Port Request Low		45	ns
wackw	$\overline{\text{WACK}}$ Pulse Width	20		ns
bprdl	Bus Clock to Port Read Low (Note 2)		40	ns
bprdh	Bus Clock to Port Read High		40	ns
wprq	Remote Write Port Request to Port Request Time (Notes 3,4,5)	12		BUSCK

Note 1: The first port request is issued in response to the remote write command. It is subsequently issued on T1 clock cycles following completion of remote DMA cycles.

Note 2: The start of the remote DMA write following $\overline{\text{WACK}}$ is dependent on where $\overline{\text{WACK}}$ is issued relative to BUSCK and whether a local DMA is pending.

Note 3: Assuming wackw $<$ 1 BUSCK, and no local DMA interleave, no $\overline{\text{CS}}$, immediate $\overline{\text{BACK}}$, and $\overline{\text{WACK}}$ goes high before T4.

Note 4: $\overline{\text{WACK}}$ must be high for a minimum of 7 BUSCK.

Note 5: This is not a measured value but guaranteed by design.

15.0 Switching Characteristics (Continued)

Serial Timing—Receive (Beginning of Frame)

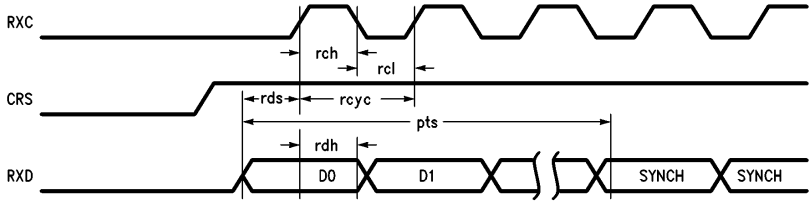

TL/F/8582–88

Symbol	Parameter	Min	Max	Units
rch	Receive Clock High Time	40		ns
rcl	Receive Clock Low Time	40		ns
rcyc	Receive Clock Cycle Time	80	120	ns
rds	Receive Data Setup Time to Receive Clock High (Note 1)	20		ns
rdh	Receive Data Hold Time from Receive Clock High	17		ns
pts	First Preamble Bit to Synch (Note 2)	8		rcyc cycles

Note 1: All bits entering NIC must be properly decoded, if the PLL is still locking, the clock to the NIC should be disabled or CRS delayed. Any two sequential 1 data bits will be interpreted as Synch.

Note 2: This is a minimum requirement which allows reception of a packet.

Serial Timing—Receive (End of Frame)

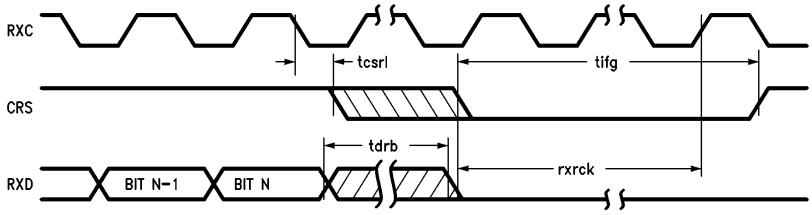

TL/F/8582–89

Symbol	Parameter	Min	Max	Units
rxrck	Minimum Number of Receive Clocks after CRS Low (Note 1)	5		rcyc cycles
tdrb	Maximum of Allowed Dribble Bits/Clocks (Note 2)		3	rcyc cycles
tifg	Receive Recovery Time (Notes 4,5)		40	rcyc cycles
tcrsl	Receive Clock to Carrier Sense Low (Note 3)	0	1	rcyc cycles

Note 1: The NIC requires a minimum number of receive clocks following the de-assertion of carrier sense (CRS). These additional clocks are provided by the DP8391 SNI. If other decoder/PLLs are being used additional clocks should be provided. Short clocks or glitches are not allowed.

Note 2: Up to 5 bits of dribble bits can be tolerated without resulting in a receive error.

Note 3: Guarantees to only load bit N, additional bits up to tdrb can be tolerated.

Note 4: This is the time required for the receive state machine to complete end of receive processing. This parameter is not measured but is guaranteed by design. This is not a measured parameter but is a design requirement.

Note 5: CRS must remain de-asserted for a minimum of 2 RXC cycles to be recognized as end of carrier.

15.0 Switching Characteristics (Continued)

Serial Timing—Transmit (Beginning of Frame)

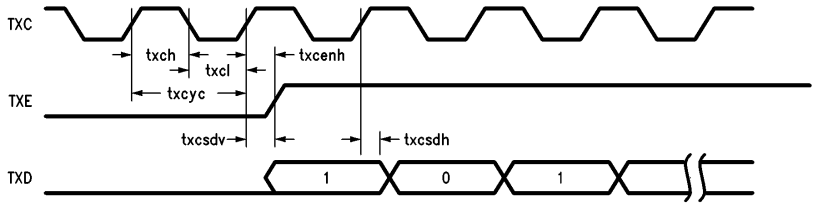

TL/F/8582–90

Symbol	Parameter	Min	Max	Units
txch	Transmit Clock High Time	36		ns
txcl	Transmit Clock Low Time	36		ns
txcyc	Transmit Clock Cycle Time	80	120	ns
txcenh	Transmit Clock to Transmit Enable High (Note 1)		48	ns
txcsdv	Transmit Clock to Serial Data Valid		67	ns
txcsdh	Serial Data Hold Time from Transmit Clock High	10		ns

Note 1: The NIC issues TXEN coincident with the first bit of preamble. The first bit of preamble is always a 1.

Serial Timing—Transmit (End of Frame, CD Heartbeat)

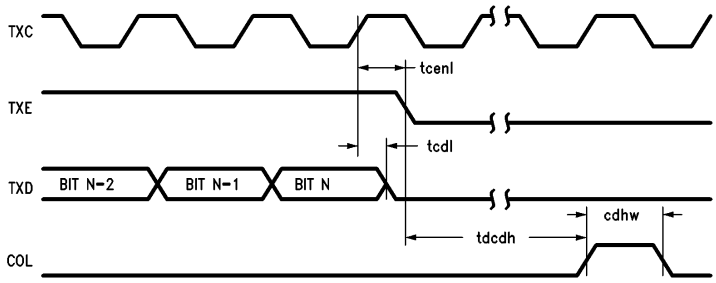

TL/F/8582–91

Symbol	Parameter	Min	Max	Units
tcdl	Transmit Clock to Data Low		55	ns
tcenl	Transmit Clock to TXEN Low		55	ns
tdcdh	TXEN Low to Start of Collision Detect Heartbeat (Note 1)	0	64	txcyc cycles
cdhw	Collision Detect Width	2		txcyc cycles

Note 1: If COL is not seen during the first 64 TX clock cycles following de-assertion of TXEN, the CDH bit in the TSR is set.

15.0 Switching Characteristics (Continued)

Serial Timing—Transmit (Collision)

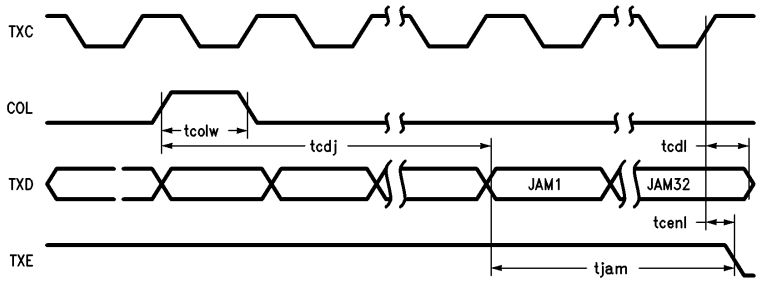

TL/F/8582–92

Symbol	Parameter	Min	Max	Units
tcolw	Collision Detect Width	2		txcyc cycles
tcdj	Delay from Collision to First Bit of Jam (Note 1)		8	txcyc cycles
tjam	Jam Period (Note 2)		32	txcyc cycles

Note 1: The NIC must synchronize to collision detect. If the NIC is in the middle of serializing a byte of data the remainder of the byte will be serialized. Thus the jam pattern will start anywhere from 1 to 8 TXC cycles after COL is asserted.

Note 2: The NIC always issues 32 bits of jam. The jam is all 1's data.

Reset Timing

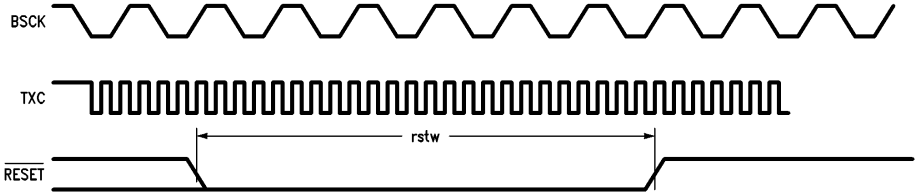

TL/F/8582–93

Symbol	Parameter	Min	Max	Units
rstw	Reset Pulse Width (Note 1)	8		BSCK Cycles or TXC Cycles (Note 2)

Note 1: The RESET pulse requires that BSCK and TXC be stable. On power up, $\overline{\text{RESET}}$ should not be raised until BSCK and TXC have become stable. Several registers are affected by $\overline{\text{RESET}}$. Consult the register descriptions for details.

Note 2: The slower of BSCK or TXC clocks will determine the minimum time for the $\overline{\text{RESET}}$ signal to be low.

If BSCK $<$ TXC then $\overline{\text{RESET}} = 8 \times$ BSCK

If TXC $<$ BSCK then $\overline{\text{RESET}} = 8 \times$ TXC

AC Timing Test Conditions

Input Pulse Levels	GND to 3.0V
Input Rise and Fall Times	5 ns
Input and Output Reference Levels	1.3V
TRI-STATE Reference Levels	Float (ΔV) $\pm$0.5V
Output Load (See Figure below)	

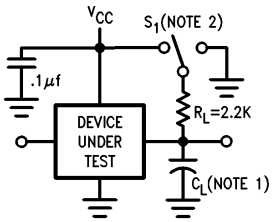

TL/F/8582–94

Note 1: C_L = 50 pF, includes scope and jig capacitance.

Note 2: S1 = Open for timing tests for push pull outputs.

S1 = V_{CC} for V_{OL} test.

S1 = GND for V_{OH} test.

S1 = V_{CC} for High Impedance to active low and active low to High Impedance measurements.

S1 = GND for High Impedance to active high and active high to High Impedance measurements.

Pin Capacitance T_A = 25°C, f = 1 MHz

Parameter	Description	Typ	Max	Unit
C_{IN}	Input Capacitance	7	15	pF
C_{OUT}	Output Capacitance	7	15	pF

Note: This parameter is sampled and not 100% tested.

DERATING FACTOR

Output timings are measured with a purely capacitave load for 50 pF. The following correction factor can be used for other loads:

$C_L \geq$ 50 pf: +0.3 ns/pF (for all outputs except TXE, TXD, and LBK)

16.0 Physical Dimensions inches (millimeters)

Lit. # 103052

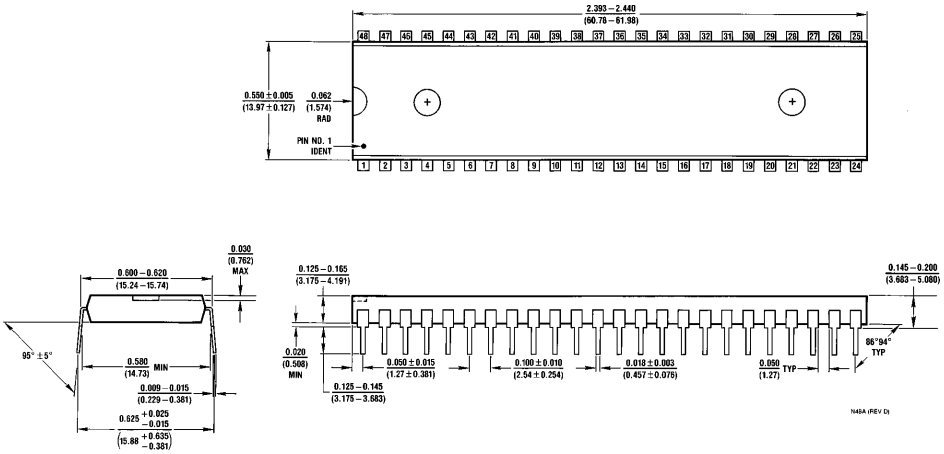

Molded Dual-In-Line Package (N)
Order Number DP8390DN
NS Package Number N48A

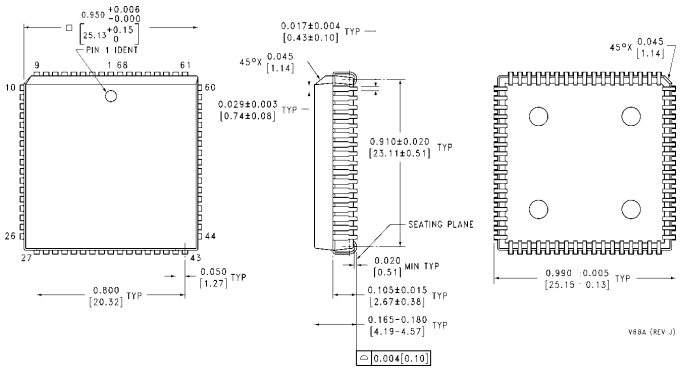

Plastic Chip Carrier (V)
Order Number DP8390DV
NS Package Number V68A

LIFE SUPPORT POLICY

NATIONAL'S PRODUCTS ARE NOT AUTHORIZED FOR USE AS CRITICAL COMPONENTS IN LIFE SUPPORT DEVICES OR SYSTEMS WITHOUT THE EXPRESS WRITTEN APPROVAL OF THE PRESIDENT OF NATIONAL SEMICONDUCTOR CORPORATION. As used herein:

1. Life support devices or systems are devices or systems which, (a) are intended for surgical implant into the body, or (b) support or sustain life, and whose failure to perform, when properly used in accordance with instructions for use provided in the labeling, can be reasonably expected to result in a significant injury to the user.
2. A critical component is any component of a life support device or system whose failure to perform can be reasonably expected to cause the failure of the life support device or system, or to affect its safety or effectiveness.

National Semiconductor Corporation
1111 West Bardin Road
Arlington, TX 76017
Tel: 1(800) 272-9959
Fax: 1(800) 737-7018

National Semiconductor Europe
Fax: (+49) 0-180-530 85 86
Email: cnjwge@tevm2.nsc.com
Deutsch Tel: (+49) 0-180-530 85 85
English Tel: (+49) 0-180-532 78 32
Français Tel: (+49) 0-180-532 93 58
Italiano Tel: (+49) 0-180-534 16 80

National Semiconductor Hong Kong Ltd.
13th Floor, Straight Block,
Ocean Centre, 5 Canton Rd.
Tsimshatsui, Kowloon
Hong Kong
Tel: (852) 2737-1600
Fax: (852) 2736-9960

National Semiconductor Japan Ltd.
Tel: 81-043-299-2309
Fax: 81-043-299-2408

National does not assume any responsibility for use of any circuitry described, no circuit patent licenses are implied and National reserves the right at any time without notice to change said circuitry and specifications.