82C54
CHMOS PROGRAMMABLE INTERVAL TIMER

- **Compatible with all Intel and most other microprocessors**
- **High Speed, "Zero Wait State" Operation with 8 MHz 8086/88 and 80186/188**
- **Handles Inputs from DC — 10 MHz for 82C54-2**
- **Available in EXPRESS**
  — Standard Temperature Range
  — Extended Temperature Range
- **Three independent 16-bit counters**
- **Low Power CHMOS**
  — I_{CC} = 10 mA @ 8 MHz Count frequency
- **Completely TTL Compatible**
- **Six Programmable Counter Modes**
- **Binary or BCD counting**
- **Status Read Back Command**
- **Available in 24-Pin DIP and 28-Pin PLCC**

The Intel 82C54 is a high-performance, CHMOS version of the industry standard 8254 counter/timer which is designed to solve the timing control problems common in microcomputer system design. It provides three independent 16-bit counters, each capable of handling clock inputs up to 10 MHz. All modes are software programmable. The 82C54 is pin compatible with the HMOS 8254, and is a superset of the 8253.

Six programmable timer modes allow the 82C54 to be used as an event counter, elapsed time indicator, programmable one-shot, and in many other applications.

The 82C54 is fabricated on Intel's advanced CHMOS III technology which provides low power consumption with performance equal to or greater than the equivalent HMOS product. The 82C54 is available in 24-pin DIP and 28-pin plastic leaded chip carrier (PLCC) packages.

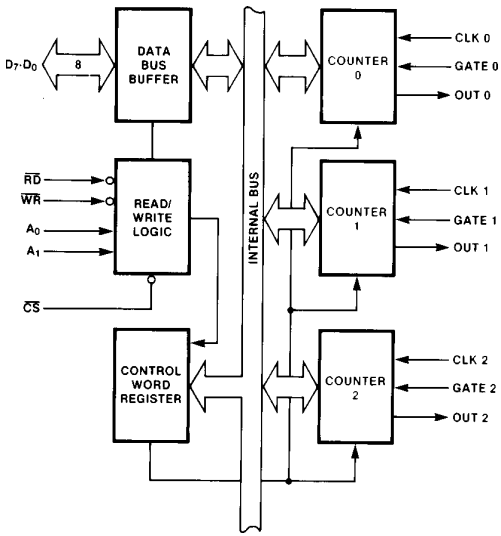

Figure 1. 82C54 Block Diagram

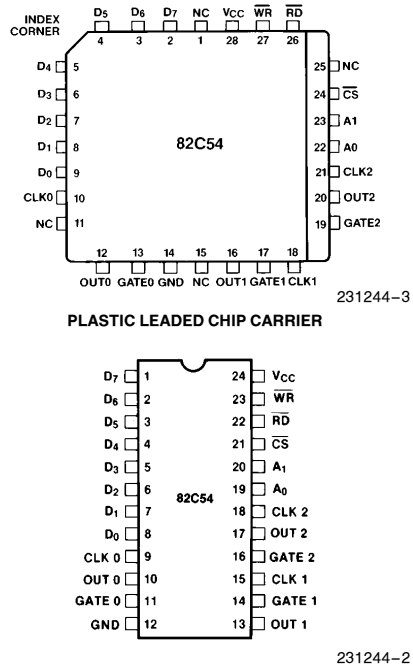

Diagrams are for pin reference only.
Package sizes are not to scale.

Figure 2. 82C54 Pinout

Table 1. Pin Description

Symbol	Pin Number DIP	Pin Number PLCC	Type	Function
D_7-D_0	1-8	2-9	I/O	Data: Bidirectional tri-state data bus lines, connected to system data bus.
CLK 0	9	10	I	Clock 0: Clock input of Counter 0.
OUT 0	10	12	O	Output 0: Output of Counter 0.
GATE 0	11	13	I	Gate 0: Gate input of Counter 0.
GND	12	14		Ground: Power supply connection.
OUT 1	13	16	O	Out 1: Output of Counter 1.
GATE 1	14	17	I	Gate 1: Gate input of Counter 1.
CLK 1	15	18	I	Clock 1: Clock input of Counter 1.
GATE 2	16	19	I	Gate 2: Gate input of Counter 2.
OUT 2	17	20	O	Out 2: Output of Counter 2.
CLK 2	18	21	I	Clock 2: Clock input of Counter 2.
A_1, A_0	20-19	23-22	I	Address: Used to select one of the three Counters or the Control Word Register for read or write operations. Normally connected to the system address bus.
				A_1 / **A_0** / **Selects**: 0 / 0 / Counter 0; 0 / 1 / Counter 1; 1 / 0 / Counter 2; 1 / 1 / Control Word Register
$\overline{CS}$	21	24	I	Chip Select: A low on this input enables the 82C54 to respond to $\overline{RD}$ and $\overline{WR}$ signals. $\overline{RD}$ and $\overline{WR}$ are ignored otherwise.
$\overline{RD}$	22	26	I	Read Control: This input is low during CPU read operations.
$\overline{WR}$	23	27	I	Write Control: This input is low during CPU write operations.
V_{CC}	24	28		Power: +5V power supply connection.
NC		1, 11, 15, 25		No Connect

FUNCTIONAL DESCRIPTION

General

The 82C54 is a programmable interval timer/counter designed for use with Intel microcomputer systems. It is a general purpose, multi-timing element that can be treated as an array of I/O ports in the system software.

The 82C54 solves one of the most common problems in any microcomputer system, the generation of accurate time delays under software control. Instead of setting up timing loops in software, the programmer configures the 82C54 to match his requirements and programs one of the counters for the desired delay. After the desired delay, the 82C54 will interrupt the CPU. Software overhead is minimal and variable length delays can easily be accommodated.

Some of the other counter/timer functions common to microcomputers which can be implemented with the 82C54 are:

- Real time clock
- Even counter
- Digital one-shot
- Programmable rate generator
- Square wave generator
- Binary rate multiplier
- Complex waveform generator
- Complex motor controller

Block Diagram

DATA BUS BUFFER

This 3-state, bi-directional, 8-bit buffer is used to interface the 82C54 to the system bus (see Figure 3).

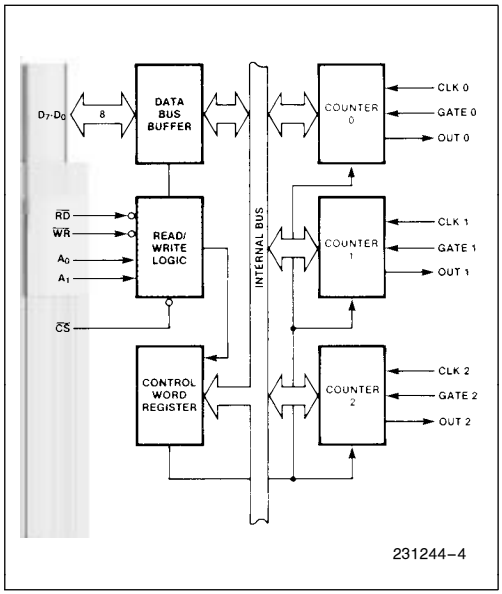

Figure 3. Block Diagram Showing Data Bus Buffer and Read/Write Logic Functions

READ/WRITE LOGIC

The Read/Write Logic accepts inputs from the system bus and generates control signals for the other functional blocks of the 82C54. A_1 and A_0 select one of the three counters or the Control Word Register to be read from/written into. A "low" on the $\overline{RD}$ input tells the 82C54 that the CPU is reading one of the counters. A "low" on the $\overline{WR}$ input tells the 82C54 that the CPU is writing either a Control Word or an initial count. Both $\overline{RD}$ and $\overline{WR}$ are qualified by $\overline{CS}$; $\overline{RD}$ and $\overline{WR}$ are ignored unless the 82C54 has been selected by holding $\overline{CS}$ low.

The WR# and CLK signals should be synchronous. This is accomplished by using a CLK input signal to the 82C54 counters which is a derivative of the system clock source. Another technique is to externally synchronize the WR# and CLK input signals. This is done by gating WR# with CLK.

CONTROL WORD REGISTER

The Control Word Register (see Figure 4) is selected by the Read/Write Logic when A_1, A_0 = 11. If the CPU then does a write operation to the 82C54, the data is stored in the Control Word Register and is interpreted as a Control Word used to define the operation of the Counters.

The Control Word Register can only be written to; status information is available with the Read-Back Command.

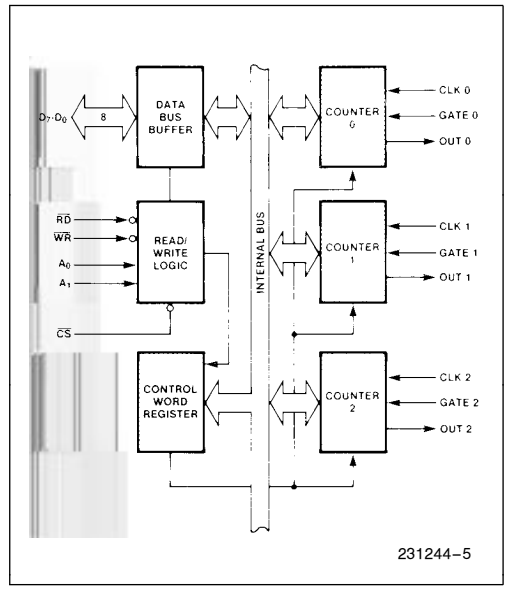

Figure 4. Block Diagram Showing Control Word Register and Counter Functions

COUNTER 0, COUNTER 1, COUNTER 2

These three functional blocks are identical in operation, so only a single Counter will be described. The internal block diagram of a single counter is shown in Figure 5.

The Counters are fully independent. Each Counter may operate in a different Mode.

The Control Word Register is shown in the figure; it is not part of the Counter itself, but its contents determine how the Counter operates.

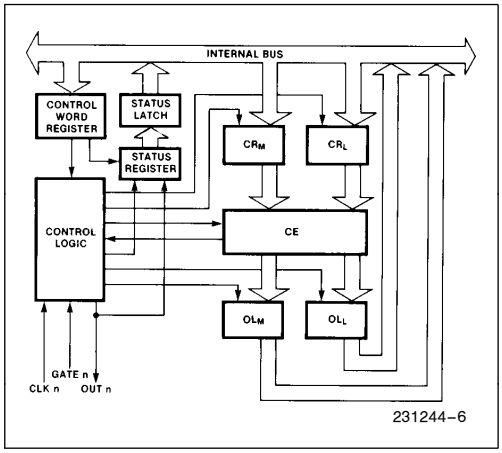

Figure 5. Internal Block Diagram of a Counter

The status register, shown in the Figure, when latched, contains the current contents of the Control Word Register and status of the output and null count flag. (See detailed explanation of the Read-Back command.)

The actual counter is labelled CE (for "Counting Element"). It is a 16-bit presettable synchronous down counter.

OL_M and OL_L are two 8-bit latches. OL stands for "Output Latch"; the subscripts M and L stand for "Most significant byte" and "Least significant byte" respectively. Both are normally referred to as one unit and called just OL. These latches normally "follow" the CE, but if a suitable Counter Latch Command is sent to the 82C54, the latches "latch" the present count until read by the CPU and then return to "following" the CE. One latch at a time is enabled by the counter's Control Logic to drive the internal bus. This is how the 16-bit Counter communicates over the 8-bit internal bus. Note that the CE itself cannot be read; whenever you read the count, it is the OL that is being read.

Similarly, there are two 8-bit registers called CR_M and CR_L (for "Count Register"). Both are normally referred to as one unit and called just CR. When a new count is written to the Counter, the count is stored in the CR and later transferred to the CE. The Control Logic allows one register at a time to be loaded from the internal bus. Both bytes are transferred to the CE simultaneously. CR_M and CR_L are cleared when the Counter is programmed. In this way, if the Counter has been programmed for one byte counts (either most significant byte only or least significant byte only) the other byte will be zero. Note that the CE cannot be written into; whenever a count is written, it is written into the CR.

The Control Logic is also shown in the diagram. CLK n, GATE n, and OUT n are all connected to the outside world through the Control Logic.

82C54 SYSTEM INTERFACE

The 82C54 is treated by the systems software as an array of peripheral I/O ports; three are counters and the fourth is a control register for MODE programming.

Basically, the select inputs A_0, A_1 connect to the A_0, A_1 address bus signals of the CPU. The $\overline{CS}$ can be derived directly from the address bus using a linear select method. Or it can be connected to the output of a decoder, such as an Intel 8205 for larger systems.

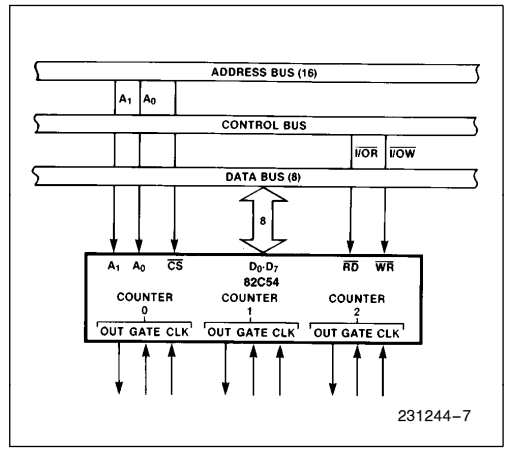

Figure 6. 82C54 System Interface

OPERATIONAL DESCRIPTION

General

After power-up, the state of the 82C54 is undefined. The Mode, count value, and output of all Counters are undefined.

How each Counter operates is determined when it is programmed. Each Counter must be programmed before it can be used. Unused counters need not be programmed.

Programming the 82C54

Counters are programmed by writing a Control Word and then an initial count. The control word format is shown in Figure 7.

All Control Words are written into the Control Word Register, which is selected when A_1, A_0 = 11. The Control Word itself specifies which Counter is being programmed.

By contrast, initial counts are written into the Counters, not the Control Word Register. The A_1, A_0 inputs are used to select the Counter to be written into. The format of the initial count is determined by the Control Word used.

Control Word Format

A_1, A_0 = 11 $\overline{CS}$ = 0 $\overline{RD}$ = 1 $\overline{WR}$ = 0

D_7	D_6	D_5	D_4	D_3	D_2	D_1	D_0
SC1	SC0	RW1	RW0	M2	M1	M0	BCD

SC — Select Counter:

SC1	SC0	
0	0	Select Counter 0
0	1	Select Counter 1
1	0	Select Counter 2
1	1	Read-Back Command (See Read Operations)

RW — Read/Write:

RW1	RW0	
0	0	Counter Latch Command (see Read Operations)
0	1	Read/Write least significant byte only.
1	0	Read/Write most significant byte only.
1	1	Read/Write least significant byte first, then most significant byte.

M — MODE:

M2	M1	M0	
0	0	0	Mode 0
0	0	1	Mode 1
X	1	0	Mode 2
X	1	1	Mode 3
1	0	0	Mode 4
1	0	1	Mode 5

BCD:

0	Binary Counter 16-bits
1	Binary Coded Decimal (BCD) Counter (4 Decades)

NOTE: Don't care bits (X) should be 0 to insure compatibility with future Intel products.

Figure 7. Control Word Format

Write Operations

The programming procedure for the 82C54 is very flexible. Only two conventions need to be remembered:

1) For each Counter, the Control Word must be written before the initial count is written.
2) The initial count must follow the count format specified in the Control Word (least significant byte only, most significant byte only, or least significant byte and then most significant byte).

Since the Control Word Register and the three Counters have separate addresses (selected by the A_1, A_0 inputs), and each Control Word specifies the Counter it applies to (SC0, SC1 bits), no special instruction sequence is required. Any programming sequence that follows the conventions above is acceptable.

A new initial count may be written to a Counter at any time without affecting the Counter's programmed Mode in any way. Counting will be affected as described in the Mode definitions. The new count must follow the programmed count format.

If a Counter is programmed to read/write two-byte counts, the following precaution applies: A program must not transfer control between writing the first and second byte to another routine which also writes into that same Counter. Otherwise, the Counter will be loaded with an incorrect count.

		A_1	A_0
Control Word —	Counter 0	1	1
LSB of count —	Counter 0	0	0
MSB of count —	Counter 0	0	0
Control Word —	Counter 1	1	1
LSB of count —	Counter 1	0	1
MSB of count —	Counter 1	0	1
Control Word —	Counter 2	1	1
LSB of count —	Counter 2	1	0
MSB of count —	Counter 2	1	0

		A_1	A_0
Control Word —	Counter 2	1	1
Control Word —	Counter 1	1	1
Control Word —	Counter 0	1	1
LSB of count —	Counter 2	1	0
MSB of count —	Counter 2	1	0
LSB of count —	Counter 1	0	1
MSB of count —	Counter 1	0	1
LSB of count —	Counter 0	0	0
MSB of count —	Counter 0	0	0

		A_1	A_0
Control Word —	Counter 0	1	1
Counter Word —	Counter 1	1	1
Control Word —	Counter 2	1	1
LSB of count —	Counter 2	1	0
LSB of count —	Counter 1	0	1
LSB of count —	Counter 0	0	0
MSB of count —	Counter 0	0	0
MSB of count —	Counter 1	0	1
MSB of count —	Counter 2	1	0

		A_1	A_0
Control Word —	Counter 1	1	1
Control Word —	Counter 0	1	1
LSB of count —	Counter 1	0	1
Control Word —	Counter 2	1	1
LSB of count —	Counter 0	0	0
MSB of count —	Counter 1	0	1
LSB of count —	Counter 2	1	0
MSB of count —	Counter 0	0	0
MSB of count —	Counter 2	1	0

NOTE:
In all four examples, all counters are programmed to read/write two-byte counts.
These are only four of many possible programming sequences.

Figure 8. A Few Possible Programming Sequences

Read Operations

It is often desirable to read the value of a Counter without disturbing the count in progress. This is easily done in the 82C54.

There are three possible methods for reading the counters: a simple read operation, the Counter Latch Command, and the Read-Back Command. Each is explained below. The first method is to perform a simple read operation. To read the Counter, which is selected with the A1, A0 inputs, the CLK input of the selected Counter must be inhibited by using either the GATE input or external logic. Otherwise, the count may be in the process of changing when it is read, giving an undefined result.

COUNTER LATCH COMMAND

The second method uses the ‘‘Counter Latch Command’’. Like a Control Word, this command is written to the Control Word Register, which is selected when A_1, A_0 = 11. Also like a Control Word, the SC0, SC1 bits select one of the three Counters, but two other bits, D5 and D4, distinguish this command from a Control Word.

A_1, A_0 = 11; $\overline{CS}$ = 0; $\overline{RD}$ = 1; $\overline{WR}$ = 0

D_7	D_6	D_5	D_4	D_3	D_2	D_1	D_0
SC1	SC0	0	0	X	X	X	X

SC1, SC0 - specify counter to be latched

SC1	SC0	Counter
0	0	0
0	1	1
1	0	2
1	1	Read-Back Command

D5,D4 - 00 designates Counter Latch Command

X - don’t care

NOTE:
Don’t care bits (X) should be 0 to insure compatibility with future Intel products.

Figure 9. Counter Latching Command Format

The selected Counter’s output latch (OL) latches the count at the time the Counter Latch Command is received. This count is held in the latch until it is read by the CPU (or until the Counter is reprogrammed). The count is then unlatched automatically and the OL returns to ‘‘following’’ the counting element (CE). This allows reading the contents of the Counters ‘‘on the fly’’ without affecting counting in progress. Multiple Counter Latch Commands may be used to latch more than one Counter. Each latched Counter’s OL holds its count until it is read. Counter Latch Commands do not affect the programmed Mode of the Counter in any way.

If a Counter is latched and then, some time later, latched again before the count is read, the second Counter Latch Command is ignored. The count read will be the count at the time the first Counter Latch Command was issued.

With either method, the count must be read according to the programmed format; specifically, if the Counter is programmed for two byte counts, two bytes must be read. The two bytes do not have to be read one right after the other; read or write or programming operations of other Counters may be inserted between them.

Another feature of the 82C54 is that reads and writes of the same Counter may be interleaved; for example, if the Counter is programmed for two byte counts, the following sequence is valid.

1. Read least significant byte.
2. Write new least significant byte.
3. Read most significant byte.
4. Write new most significant byte.

If a Counter is programmed to read/write two-byte counts, the following precaution applies; A program must not transfer control between reading the first and second byte to another routine which also reads from that same Counter. Otherwise, an incorrect count will be read.

READ-BACK COMMAND

The third method uses the Read-Back command. This command allows the user to check the count value, programmed Mode, and current state of the OUT pin and Null Count flag of the selected counter(s).

The command is written into the Control Word Register and has the format shown in Figure 10. The command applies to the counters selected by setting their corresponding bits D3,D2,D1 = 1.

A0, A1 = 11 $\overline{CS}$ = 0 $\overline{RD}$ = 1 $\overline{WR}$ = 0

D_7	D_6	D_5	D_4	D_3	D_2	D_1	D_0
1	1	$\overline{COUNT}$	$\overline{STATUS}$	CNT 2	CNT 1	CNT 0	0

D_5: 0 = Latch count of selected counter(s)
D_4: 0 = Latch status of selected counter(s)
D_3: 1 = Select counter 2
D_2: 1 = Select counter 1
D_1: 1 = Select counter 0
D_0: Reserved for future expansion; must be 0

Figure 10. Read-Back Command Format

The read-back command may be used to latch multiple counter output latches (OL) by setting the $\overline{COUNT}$ bit D5 = 0 and selecting the desired counter(s). This single command is functionally equivalent to several counter latch commands, one for each counter latched. Each counter’s latched count is held until it is read (or the counter is reprogrammed). That counter is automatically unlatched when read, but other counters remain latched until they are read. If multiple count read-back commands are issued to the same counter without reading the

count, all but the first are ignored; i.e., the count which will be read is the count at the time the first read-back command was issued.

The read-back command may also be used to latch status information of selected counter(s) by setting $\overline{\text{STATUS}}$ bit D4 = 0. Status must be latched to be read; status of a counter is accessed by a read from that counter.

The counter status format is shown in Figure 11. Bits D5 through D0 contain the counter's programmed Mode exactly as written in the last Mode Control Word. OUTPUT bit D7 contains the current state of the OUT pin. This allows the user to monitor the counter's output via software, possibly eliminating some hardware from a system.

D_7	D_6	D_5	D_4	D_3	D_2	D_1	D_0
OUTPUT	NULL COUNT	RW1	RW0	M2	M1	M0	BCD

D_7 1 = Out Pin is 1
0 = Out Pin is 0
D_6 1 = Null count
0 = Count available for reading
D_5-D_0 Counter Programmed Mode (See Figure 7)

Figure 11. Status Byte

NULL COUNT bit D6 indicates when the last count written to the counter register (CR) has been loaded into the counting element (CE). The exact time this happens depends on the Mode of the counter and is described in the Mode Definitions, but until the count is loaded into the counting element (CE), it can't be read from the counter. If the count is latched or read before this time, the count value will not reflect the new count just written. The operation of Null Count is shown in Figure 12.

THIS ACTION:	CAUSES:
A. Write to the control word register:[1]	Null count = 1
B. Write to the count register (CR);[2]	Null count = 1
C. New count is loaded into CE (CR → CE);	Null count = 0

[1] Only the counter specified by the control word will have its null count set to 1. Null count bits of other counters are unaffected.
[2] If the counter is programmed for two-byte counts (least significant byte then most significant byte) null count goes to 1 when the second byte is written.

Figure 12. Null Count Operation

If multiple status latch operations of the counter(s) are performed without reading the status, all but the first are ignored; i.e., the status that will be read is the status of the counter at the time the first status read-back command was issued.

Both count and status of the selected counter(s) may be latched simultaneously by setting both $\overline{\text{COUNT}}$ and $\overline{\text{STATUS}}$ bits D5,D4 = 0. This is functionally the same as issuing two separate read-back commands at once, and the above discussions apply here also. Specifically, if multiple count and/or status read-back commands are issued to the same counter(s) without any intervening reads, all but the first are ignored. This is illustrated in Figure 13.

If both count and status of a counter are latched, the first read operation of that counter will return latched status, regardless of which was latched first. The next one or two reads (depending on whether the counter is programmed for one or two type counts) return latched count. Subsequent reads return unlatched count.

Command								Description	Results
D_7	D_6	D_5	D_4	D_3	D_2	D_1	D_0		
1	1	0	0	0	0	1	0	Read back count and status of Counter 0	Count and status latched for Counter 0
1	1	1	0	0	1	0	0	Read back status of Counter 1	Status latched for Counter 1
1	1	1	0	1	1	0	0	Read back status of Counters 2, 1	Status latched for Counter 2, but not Counter 1
1	1	0	1	1	0	0	0	Read back count of Counter 2	Count latched for Counter 2
1	1	0	0	0	1	0	0	Read back count and status of Counter 1	Count latched for Counter 1, but not status
1	1	1	0	0	0	1	0	Read back status of Counter 1	Command ignored, status already latched for Counter 1

Figure 13. Read-Back Command Example

$\overline{CS}$	$\overline{RD}$	$\overline{WR}$	A_1	A_0	
0	1	0	0	0	Write into Counter 0
0	1	0	0	1	Write into Counter 1
0	1	0	1	0	Write into Counter 2
0	1	0	1	1	Write Control Word
0	0	1	0	0	Read from Counter 0
0	0	1	0	1	Read from Counter 1
0	0	1	1	0	Read from Counter 2
0	0	1	1	1	No-Operation (3-State)
1	X	X	X	X	No-Operation (3-State)
0	1	1	X	X	No-Operation (3-State)

Figure 14. Read/Write Operations Summary

Mode Definitions

The following are defined for use in describing the operation of the 82C54.

CLK PULSE: a rising edge, then a falling edge, in that order, of a Counter's CLK input.

TRIGGER: a rising edge of a Counter's GATE input.

COUNTER LOADING: the transfer of a count from the CR to the CE (refer to the "Functional Description")

MODE 0: INTERRUPT ON TERMINAL COUNT

Mode 0 is typically used for event counting. After the Control Word is written, OUT is initially low, and will remain low until the Counter reaches zero. OUT then goes high and remains high until a new count or a new Mode 0 Control Word is written into the Counter.

GATE = 1 enables counting; GATE = 0 disables counting. GATE has no effect on OUT.

After the Control Word and initial count are written to a Counter, the initial count will be loaded on the next CLK pulse. This CLK pulse does not decrement the count, so for an initial count of N, OUT does not go high until N + 1 CLK pulses after the initial count is written.

If a new count is written to the Counter, it will be loaded on the next CLK pulse and counting will continue from the new count. If a two-byte count is written, the following happens:

1) Writing the first byte does not disable counting. OUT is set low immediately (no clock pulse required).
2) Writing the second byte allows the new count to be loaded on the next CLK pulse.
3) When there is a count in progress, writing a new LSB before the counter has counted down to 0 and rolled over to FFFFh, WILL stop the counter. However, if the LSB is loaded AFTER the counter has rolled over to FFFFh, so that an MSB now exists in the counter, then the counter WILL NOT stop.

This allows the counting sequence to be synchronized by software. Again, OUT does not go high until N + 1 CLK pulses after the new count of N is written.

If an initial count is written while GATE = 0, it will still be loaded on the next CLK pulse. When GATE goes high, OUT will go high N CLK pulses later; no CLK pulse is needed to load the Counter as this has already been done.

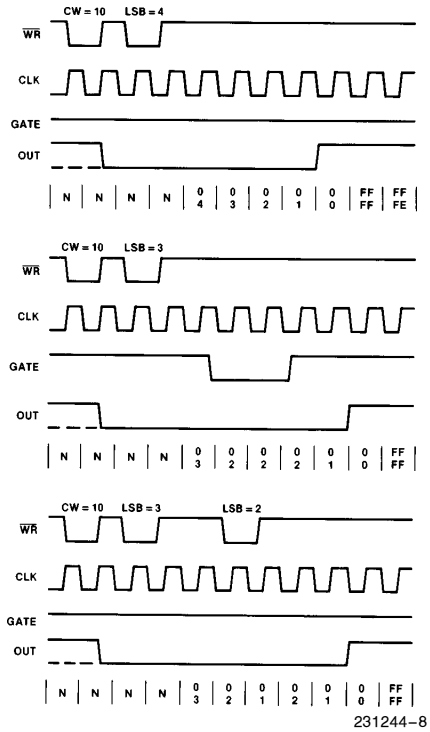

NOTE:
The Following Conventions Apply To All Mode Timing Diagrams:
1. Counters are programmed for binary (not BCD) counting and for Reading/Writing least significant byte (LSB) only.
2. The counter is always selected ($\overline{CS}$ always low).
3. CW stands for "Control Word"; CW = 10 means a control word of 10, hex is written to the counter.
4. LSB stands for "Least Significant Byte" of count.
5. Numbers below diagrams are count values.
The lower number is the least significant byte.
The upper number is the most significant byte. Since the counter is programmed to Read/Write LSB only, the most significant byte cannot be read.
N stands for an undefined count.
Vertical lines show transitions between count values.

Figure 15. Mode 0

MODE 1: HARDWARE RETRIGGERABLE ONE-SHOT

OUT will be initially high. OUT will go low on the CLK pulse following a trigger to begin the one-shot pulse, and will remain low until the Counter reaches zero. OUT will then go high and remain high until the CLK pulse after the next trigger.

After writing the Control Word and initial count, the Counter is armed. A trigger results in loading the Counter and setting OUT low on the next CLK pulse, thus starting the one-shot pulse. An initial count of N will result in a one-shot pulse N CLK cycles in duration. The one-shot is retriggerable, hence OUT will remain low for N CLK pulses after any trigger. The one-shot pulse can be repeated without rewriting the same count into the counter. GATE has no effect on OUT.

If a new count is written to the Counter during a one-shot pulse, the current one-shot is not affected unless the Counter is retriggered. In that case, the Counter is loaded with the new count and the one-shot pulse continues until the new count expires.

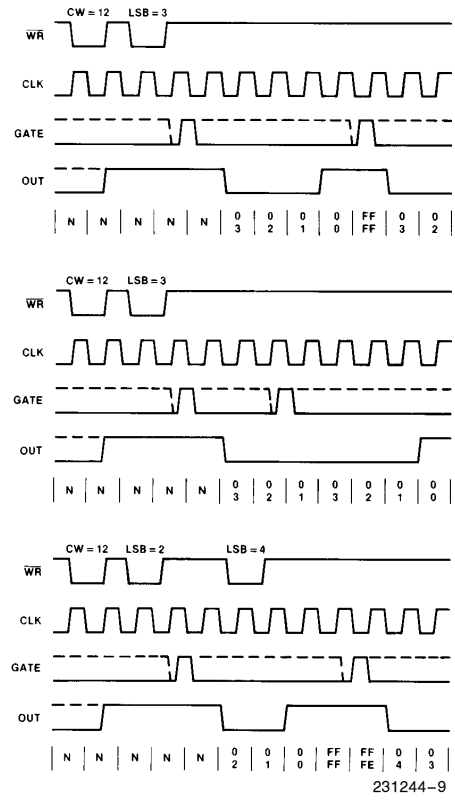

Figure 16. Mode 1

MODE 2: RATE GENERATOR

This Mode functions like a divide-by-N counter. It is typically used to generate a Real Time Clock interrupt. OUT will initially be high. When the initial count has decremented to 1, OUT goes low for one CLK pulse. OUT then goes high again, the Counter reloads the initial count and the process is repeated. Mode 2 is periodic; the same sequence is repeated indefinitely. For an initial count of N, the sequence repeats every N CLK cycles.

GATE = 1 enables counting; GATE = 0 disables counting. If GATE goes low during an output pulse, OUT is set high immediately. A trigger reloads the Counter with the initial count on the next CLK pulse; OUT goes low N CLK pulses after the trigger. Thus the GATE input can be used to synchronize the Counter.

After writing a Control Word and initial count, the Counter will be loaded on the next CLK pulse. OUT goes low N CLK Pulses after the initial count is written. This allows the Counter to be synchronized by software also.

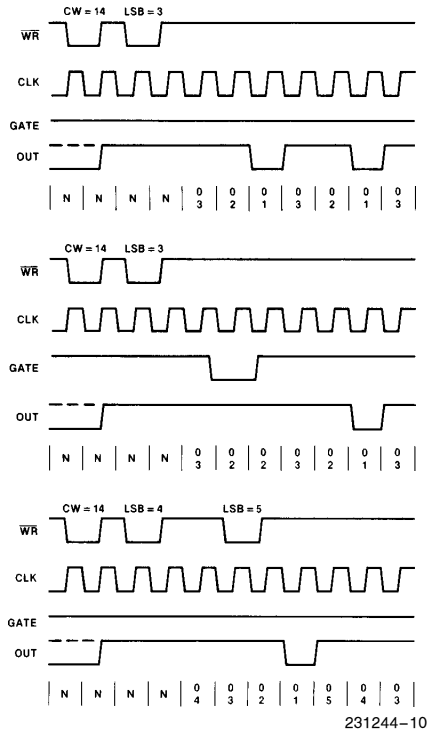

NOTE:
A GATE transition should not occur one clock prior to terminal count.

Figure 17. Mode 2

Writing a new count while counting does not affect the current counting sequence. If a trigger is received after writing a new count but before the end of the current period, the Counter will be loaded with the new count on the next CLK pulse and counting will continue from the new count. Otherwise, the new count will be loaded at the end of the current counting cycle. In mode 2, a COUNT of 1 is illegal.

MODE 3: SQUARE WAVE MODE

Mode 3 is typically used for Baud rate generation. Mode 3 is similar to Mode 2 except for the duty cycle of OUT. OUT will initially be high. When half the initial count has expired, OUT goes low for the remainder of the count. Mode 3 is periodic; the sequence above is repeated indefinitely. An initial count of N results in a square wave with a period of N CLK cycles.

GATE = 1 enables counting; GATE = 0 disables counting. If GATE goes low while OUT is low, OUT is set high immediately; no CLK pulse is required. A trigger reloads the Counter with the initial count on the next CLK pulse. Thus the GATE input can be used to synchronize the Counter.

After writing a Control Word and initial count, the Counter will be loaded on the next CLK pulse. This allows the Counter to be synchronized by software also.

Writing a new count while counting does not affect the current counting sequence. If a trigger is received after writing a new count but before the end of the current half-cycle of the square wave, the Counter will be loaded with the new count on the next CLK pulse and counting will continue from the new count. Otherwise, the new count will be loaded at the end of the current half-cycle.

Mode 3 is implemented as follows:

Even counts: OUT is initially high. The initial count is loaded on one CLK pulse and then is decremented by two on succeeding CLK pulses. When the count expires OUT changes value and the Counter is reloaded with the initial count. The above process is repeated indefinitely.

Odd counts: OUT is initially high. The initial count minus one (an even number) is loaded on one CLK pulse and then is decremented by two on succeeding CLK pulses. One CLK pulse *after* the count expires, OUT goes low and the Counter is reloaded with the initial count minus one. Succeeding CLK pulses decrement the count by two. When the count expires, OUT goes high again and the Counter is reloaded with the initial count minus one. The above process is repeated indefinitely. So for odd counts,

OUT will be high for (N + 1)/2 counts and low for (N −1)/2 counts.

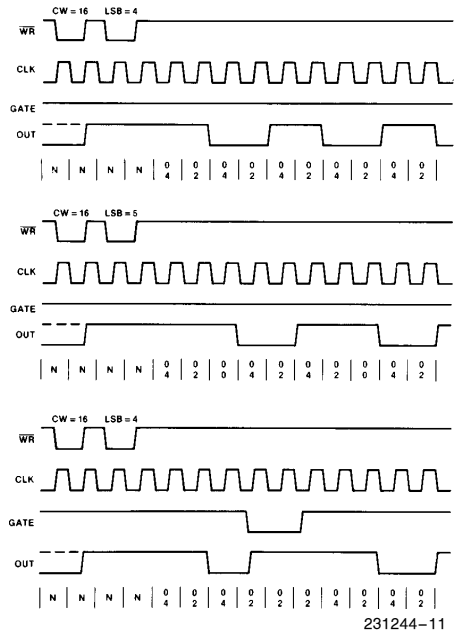

NOTE:
A GATE transition should not occur one clock prior to terminal count.

Figure 18. Mode 3

MODE 4: SOFTWARE TRIGGERED STROBE

OUT will be initially high. When the initial count expires, OUT will go low for one CLK pulse and then go high again. The counting sequence is "triggered" by writing the initial count.

GATE = 1 enables counting; GATE = 0 disables counting. GATE has no effect on OUT.

After writing a Control Word and initial count, the Counter will be loaded on the next CLK pulse. This CLK pulse does not decrement the count, so for an initial count of N, OUT does not strobe low until N + 1 CLK pulses after the initial count is written.

If a new count is written during counting, it will be loaded on the next CLK pulse and counting will continue from the new count. If a two-byte count is written, the following happens:

1) Writing the first byte has no effect on counting.
2) Writing the second byte allows the new count to be loaded on the next CLK pulse.

This allows the sequence to be "retriggered" by software. OUT strobes low N+1 CLK pulses after the new count of N is written.

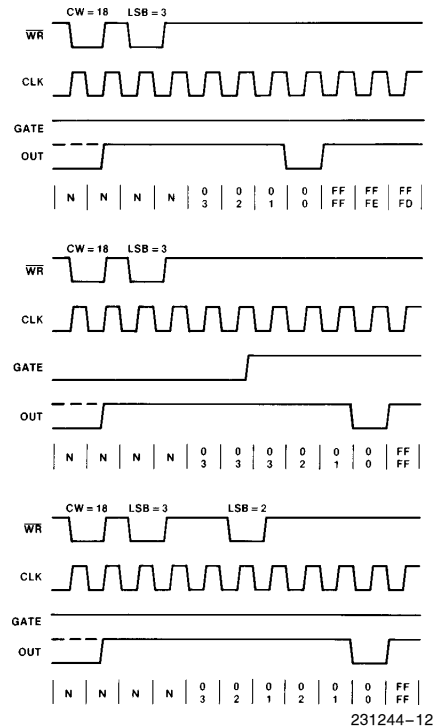

Figure 19. Mode 4

MODE 5: HARDWARE TRIGGERED STROBE (RETRIGGERABLE)

OUT will initially be high. Counting is triggered by a rising edge of GATE. When the initial count has expired, OUT will go low for one CLK pulse and then go high again.

After writing the Control Word and initial count, the counter will not be loaded until the CLK pulse after a trigger. This CLK pulse does not decrement the count, so for an initial count of N, OUT does not strobe low until N+1 CLK pulses after a trigger.

A trigger results in the Counter being loaded with the initial count on the next CLK pulse. The counting sequence is retriggerable. OUT will not strobe low for N + 1 CLK pulses after any trigger. GATE has no effect on OUT.

If a new count is written during counting, the current counting sequence will not be affected. If a trigger occurs after the new count is written but before the current count expires, the Counter will be loaded with the new count on the next CLK pulse and counting will continue from there.

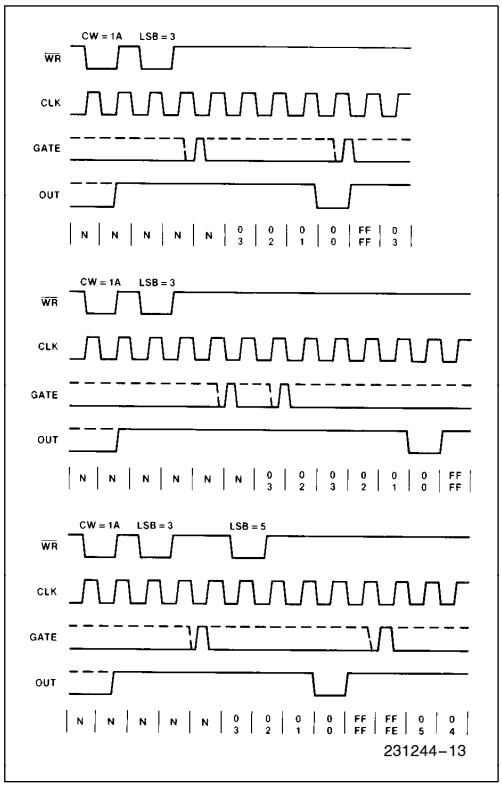

Figure 20. Mode 5

Signal Status Modes	Low Or Going Low	Rising	High
0	Disables counting	—	Enables counting
1	—	1) Initiates counting 2) Resets output after next clock	—
2	1) Disables counting 2) Sets output immediately high	Initiates counting	Enables counting
3	1) Disables counting 2) Sets output immediately high	Initiates counting	Enables counting
4	Disables counting	—	Enables counting
5	—	Initiates counting	—

Figure 21. Gate Pin Operations Summary

MODE	MIN COUNT	MAX COUNT
0	1	0
1	1	0
2	2	0
3	2	0
4	1	0

NOTE:
0 is equivalent to 2^{16} for binary counting and 10^4 for BCD counting

Figure 22. Minimum and Maximum initial Counts

Operation Common to All Modes

Programming

When a Control Word is written to a Counter, all Control Logic is immediately reset and OUT goes to a known initial state; no CLK pulses are required for this.

GATE

The GATE input is always sampled on the rising edge of CLK. In Modes 0, 2, 3, and 4 the GATE input is level sensitive, and the logic level is sampled on the rising edge of CLK. In Modes 1, 2, 3, and 5 the GATE input is rising-edge sensitive. In these Modes, a rising edge of GATE (trigger) sets an edge-sensitive flip-flop in the Counter. This flip-flop is then sampled on the next rising edge of CLK; the flip-flop is reset immediately after it is sampled. In this way, a trigger will be detected no matter when it occurs—a high logic level does not have to be maintained until the next rising edge of CLK. Note that in Modes 2 and 3, the GATE input is both edge- and level-sensitive. In Modes 2 and 3, if a CLK source other than the system clock is used, GATE should be pulsed immediately following $\overline{WR}$ of a new count value.

COUNTER

New counts are loaded and Counters are decremented on the falling edge of CLK.

The largest possible initial count is 0; this is equivalent to 2^{16} for binary counting and 10^4 for BCD counting.

The Counter does not stop when it reaches zero. In Modes 0, 1, 4, and 5 the Counter ‘‘wraps around’’ to the highest count, either FFFF hex for binary counting or 9999 for BCD counting, and continues counting. Modes 2 and 3 are periodic; the Counter reloads itself with the initial count and continues counting from there.

ABSOLUTE MAXIMUM RATINGS*

Ambient Temperature Under Bias.....0°C to 70°C
Storage Temperature .....−65° to +150°C
Supply Voltage .....−0.5 to +8.0V
Operating Voltage .....+4V to +7V
Voltage on any Input.....GND −2V to +6.5V
Voltage on any Output ..GND−0.5V to V_{CC} + 0.5V
Power Dissipation .....1 Watt

NOTICE: This is a production data sheet. The specifications are subject to change without notice.

**WARNING: Stressing the device beyond the "Absolute Maximum Ratings" may cause permanent damage. These are stress ratings only. Operation beyond the "Operating Conditions" is not recommended and extended exposure beyond the "Operating Conditions" may affect device reliability.*

D.C. CHARACTERISTICS

(T_A=0°C to 70°C, V_{CC}=5V± 10%, GND=0V) (T_A = −40°C to +85°C for Extended Temperature)

Symbol	Parameter	Min	Max	Units	Test Conditions
V_{IL}	Input Low Voltage	−0.5	0.8	V	
V_{IH}	Input High Voltage	2.0	V_{CC} + 0.5	V	
V_{OL}	Output Low Voltage		0.4	V	I_{OL} = 2.5 mA
V_{OH}	Output High Voltage	3.0 V_{CC} − 0.4		V V	I_{OH} = −2.5 mA I_{OH} = −100 μA
I_{IL}	Input Load Current		±2.0	μA	V_{IN}=V_{CC} to 0V
I_{OFL}	Output Float Leakage Current		±10	μA	V_{OUT}=V_{CC} to 0.0V
I_{CC}	V_{CC} Supply Current		20	mA	Clk Freq= 8MHz 82C54 10MHz 82C54-2
I_{CCSB}	V_{CC} Supply Current-Standby		10	μA	CLK Freq = DC $\overline{CS}$ = V_{CC}. All Inputs/Data Bus V_{CC} All Outputs Floating
I_{CCSB1}	V_{CC} Supply Current-Standby		150	μA	CLK Freq = DC $\overline{CS}$ = V_{CC}. All Other Inputs, I/O Pins = V_{GND}, Outputs Open
C_{IN}	Input Capacitance		10	pF	f_c = 1 MHz
$C_{I/O}$	I/O Capacitance		20	pF	Unmeasured pins returned to GND(5)
C_{OUT}	Output Capacitance		20	pF	

A.C. CHARACTERISTICS

(T_A = 0°C to 70°C, V_{CC} = 5V ±10%, GND =0V) (T_A = −40°C to +85°C for Extended Temperature)

BUS PARAMETERS (Note 1)

READ CYCLE

Symbol	Parameter	82C54-2		Units
		Min	Max	
t_{AR}	Address Stable Before $\overline{RD}$ ↓	30		ns
t_{SR}	$\overline{CS}$ Stable Before $\overline{RD}$ ↓	0		ns
t_{RA}	Address Hold Time After $\overline{RD}$ ↑	0		ns
t_{RR}	$\overline{RD}$ Pulse Width	95		ns
t_{RD}	Data Delay from $\overline{RD}$ ↓		85	ns
t_{AD}	Data Delay from Address		185	ns
t_{DF}	$\overline{RD}$ ↑ to Data Floating	5	65	ns
t_{RV}	Command Recovery Time	165		ns

NOTE:
1. AC timings measured at V_{OH} = 2.0V, V_{OL} = 0.8V.

A.C. CHARACTERISTICS (Continued)

WRITE CYCLE

Symbol	Parameter	82C54-2		Units
		Min	Max	
t_{AW}	Address Stable Before $\overline{WR}$ ↓	0		ns
t_{SW}	$\overline{CS}$ Stable Before $\overline{WR}$ ↓	0		ns
t_{WA}	Address Hold Time After $\overline{WR}$ ↑	0		ns
t_{WW}	$\overline{WR}$ Pulse Width	95		ns
t_{DW}	Data Setup Time Before $\overline{WR}$ ↑	95		ns
t_{WD}	Data Hold Time After $\overline{WR}$ ↑	0		ns
t_{RV}	Command Recovery Time	165		ns

CLOCK AND GATE

Symbol	Parameter	82C54-2		Units
		Min	Max	
t_{CLK}	Clock Period	100	DC	ns
t_{PWH}	High Pulse Width	30(3)		ns
t_{PWL}	Low Pulse Width	50(3)		ns
T_R	Clock Rise Time		25	ns
t_F	Clock Fall Time		25	ns
t_{GW}	Gate Width High	50		ns
t_{GL}	Gate Width Low	50		ns
t_{GS}	Gate Setup Time to CLK ↑	40		ns
t_{GH}	Gate Hold Time After CLK ↑	50(2)		ns
T_{OD}	Output Delay from CLK ↓		100	ns
t_{ODG}	Output Delay from Gate ↓		100	ns
t_{WC}	CLK Delay for Loading(4)	0	55	ns
t_{WG}	Gate Delay for Sampling(4)	−5	40	ns
t_{WO}	OUT Delay from Mode Write		240	ns
t_{CL}	CLK Set Up for Count Latch	−40	40	ns

NOTES:
2. In Modes 1 and 5 triggers are sampled on each rising clock edge. A second trigger within 70 ns for the 82C54-2 of the rising clock edge may not be detected.
3. Low-going glitches that violate t_{PWH}, t_{PWL} may cause errors requiring counter reprogramming.
4. Except for Extended Temp., See Extended Temp. A.C. Characteristics below.
5. Sampled not 100% tested. $T_A = 25°C$.
6. If CLK present at T_{WC} min then Count equals N+2 CLK pulses, T_{WC} max equals Count N+1 CLK pulse. T_{WC} min to T_{WC} max, count will be either N+1 or N+2 CLK pulses.
7. In Modes 1 and 5, if GATE is present when writing a new Count value, at T_{WG} min Counter will not be triggered, at T_{WG} max Counter will be triggered.
8. If CLK present when writing a Counter Latch or ReadBack Command, at T_{CL} min CLK will be reflected in count value latched, at T_{CL} max CLK will not be reflected in the count value latched. Writing a Counter Latch or ReadBack Command between T_{CL} min and T_{WL} max will result in a latched count vallue which is ± one least significant bit.

EXTENDED TEMPERATURE ($T_A = -40°C$ to $+85°C$ for Extended Temperature)

Symbol	Parameter	82C54-2		Units
		Min	Max	
t_{WC}	CLK Delay for Loading	−25	25	ns
t_{WG}	Gate Delay for Sampling	−25	25	ns

WAVEFORMS

WRITE

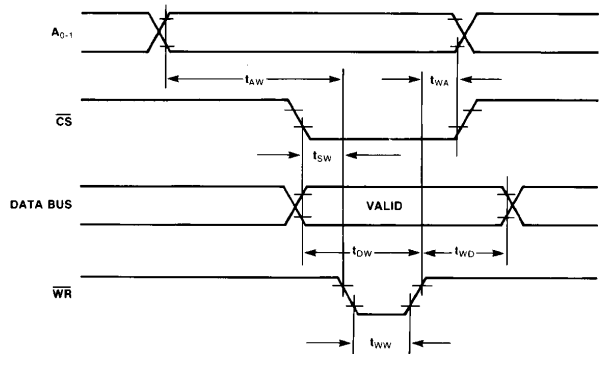

231244–14

READ

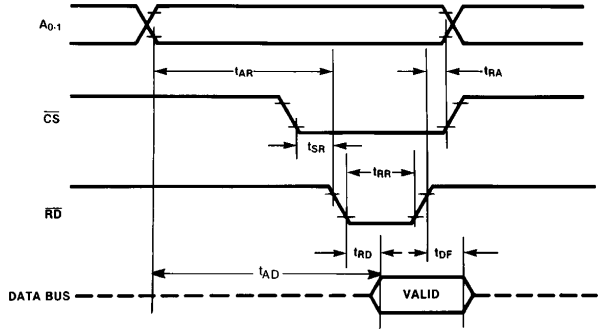

231244–15

RECOVERY

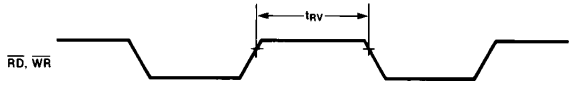

231244–16

CLOCK AND GATE

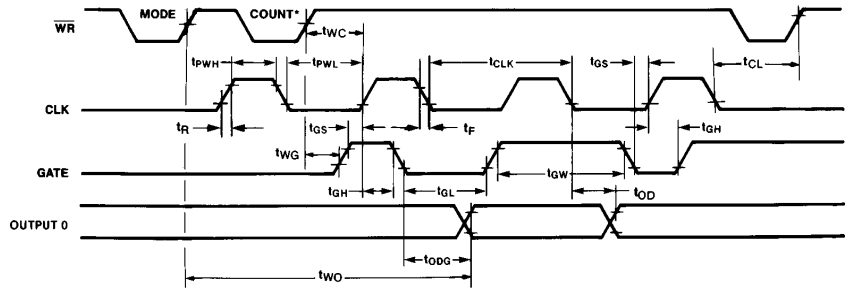

231244–17

* Last byte of count being written

A.C. TESTING INPUT, OUTPUT WAVEFORM

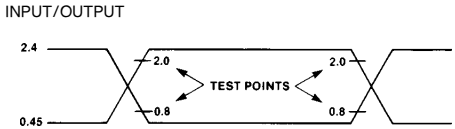

231244–18

A.C. Testing: Inputs are driven at 2.4V for a logic "1" and 0.45V for a logic "0." Timing measurements are made at 2.0V for a logic "1" and 0.8V for a logic "0."

A.C. TESTING LOAD CIRCUIT

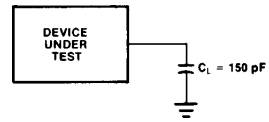

231244–19

C_L = 150 pF
C_L includes jig capacitance

REVISION SUMMARY

The following list represents the key differences between Rev. 005 and 006 of the 82C54 Data Sheet.

1. References to and specifications for the 8 MHz 82C54 are removed. Only the 10 MHz 82C52-2 remains in production.